VUETRADE™
for the builder

Timber Connectors
COMPLIANCE GUIDE

The builder's first choice.

vuetrade.com

DISCLAIMER

ATTENTION

CONDITIONS OF SALE AND USE

Upon purchasing and using this product, the purchaser ("you") agrees to be bound by the conditions set out below. Do not use this product until you have read and agreed with all the terms. If, before using this product, any of these conditions are not acceptable to you, the product should be immediately returned in its original condition to the place of purchase, together with proof of purchase, for a refund.

CONDITIONS

You agree that:

1. Except to the extent of any representations made by Bellevue Group Australasia Pty Ltd in relation to this product, it remains your responsibility to ensure that the product being purchased is fit for its intended use;
2. If this product does not comply with its description, within recognised tolerances, the liability of Bellevue Group Australasia Pty Ltd will be limited solely to the cost of replacement of the product;
3. Bellevue Group Australasia Pty Ltd will not be liable to you or any other person for any injury, loss, or damage caused or contributed to by Bellevue Group Australasia Pty Ltd (or its servants or agents), directly or indirectly arising out of or related to the use of this product, whether as a result of negligence or otherwise;
4. To the greatest extent permitted by law, all warranties, conditions, liabilities or representations in relation to the product, whether express or implied, are excluded by Bellevue Group Australasia Pty Ltd;
5. Without limiting any of these terms, you may only use this product in accordance with all relevant technical data as detailed on our website (www.vuetrade.com) and only in conjunction with:
    a. other genuine VUETRADE products manufactured from the appropriate material; or
    b. products which Bellevue Group Australasia Pty Ltd have recommended and approved for use with the VUETRADE products.

Scan now

to access the latest VUETRADE Compliance Guide as a PDF

vuetrade.com/complianceguide

This is Version v1.2 DEC23

ABOUT US

Delivering on providing Innovative, Quality and Timesaving Timber Connectors & Building Materials to the building industry.

VUETRADE products are developed and distributed across Australia and New Zealand by Bellevue Group Australasia, a wholly Australian owned manufacturer and supplier with many years' experience in the building industry.

HISTORY

Bellevue Group Australasia | VUETRADE have a solid history and reputation for providing quality service and products. Our understanding and providing for our customer's needs comes from a long association with the building industry, and a network of retail and trade outlets for our range of products.

We strive to have as many products as possible made in Australia and New Zealand. This committal is born of two logics; we have a belief in the quality of product made locally for Australia and New Zealand conditions, and a committal to supporting jobs here in the region.

QUALITY

VUETRADE products are tested in house for compliance, development, and quality control. We are committed to supplying quality product and are consistently working to improve our testing and development capabilities.

VUETRADE

COMPLIANCE GUIDE

CONTENTS

PRODUCTS A-Z

COMPLIANCE

COMPLIANCY CERTIFICATION FOR VUETRADE TIMBER CONNECTOR PRODUCTS

This statement is issued by Bellevue Group Australasia to certify that the method of testing and VUETRADE Timber Connector products listed below, not limited to, comply with the minimum requirement set out by the relevant Australian Standard and National Construction Code.

(1) VUETRADE BUILDER'S STRAPPING

This confirms that VUETRADE Builder's Strapping as listed below fully comply with the minimum requirement outlined by the Australian Standard AS1684.2:2021 *Residential timber-framed construction; Part 2: Non-cyclonic areas*; AS1684.3:2021 *Residential timber-framed construction Part 3: Cyclonic Areas*; and AS1684.4-2010 *Residential timber-framed construction Part 4: Simplified – Non Cyclonic Areas* for application in wall bracing.

VUETRADE Builder's Strapping			
Product Dimensions	30mm x 0.8mm	30mm x 1.0mm	30mm x 1.2mm
Product Code	VB3086, VB30815, VB30830	VB3016, VB30115, VB30130, VB30150	VB301230, VB301250
Fully comply to the requirement outlined in AS1684.2 & AS1684.3	Table 8.18 part (b) and part (d)	Table 8.18 part (b) and part (d)	Table 8.18 part (b) and part (d)
Fully comply to the requirement outlined in AS1684.4	Table 8.3 part (b) and part (d)	Table 8.3 part (b) and part (d)	Table 8.3 part (b) and part (d)

VUETRADE Builder's Strapping products are manufactured with steel grade G300 and have a corrosion protection of Z275 therefore satisfy the minimum requirement outlined in:

- Clause 1.15 of AS1684.2:2021 for minimum material and corrosion protection of G300 and Z275 respectively;
- Clause 1.15 of AS1684.3:2021 for minimum material and corrosion protection of G300 and Z275 respectively; and
- Clause 1.14 of AS1684.4-2010 for minimum material and corrosion protection of G300 and Z275 respectively.

(2) VUETRADE TIMBER CONNECTORS

This confirms that VUETRADE Timber Connectors products i.e. VUETRADE Mini Grip (VTMG57), Multi Grip (VTMG100, VTMG115), Triple Grip (VTTG), Cyclonic Straps (VTCS), Joist Hanger (VJH), Tap in Plates (VTIP) etc are manufactured with steel grade G300 and have a corrosion protection of Z275, therefore satisfied the minimum requirement outlined in:

- Clause 1.15 of AS1684.2:2021 for minimum material and corrosion protection of G300 and Z275 respectively;
- Clause 1.15 of AS1684.3:2021 for minimum material and corrosion protection of G300 and Z275 respectively; and
- Clause 1.14 of AS1684.4-2010 for minimum material and corrosion protection of G300 and Z275 respectively.

Design Capacities derived and compiled for technical data for products aforementioned are derived for timber joint group defined in AS1720.1-2010 *Timber Structures Part 1: Design methods* and AS1720.2-2006 *Timber Structures Part 2: Timber Properties*.

(3) VUETRADE POST SUPPORTS

This confirms that VUETRADE Post Supports i.e. Bolt Down Post Supports (VBPS), Full Stirrup Post Support (VPS) etc satisfied the requirements of the following Australian Standards and Building Codes:

- Post supports are hot dipped galvanised as defined by the National Construction Code (NCC2022) – minimum protective coating requirements of 300g/m2 suitable for severe external environment.
- Design Capacities are derived for timber joint group defined in AS1720.1-2010 *Timber Structures Part 1: Design methods* and AS1720.2-2006 *Timber Structures Part 2: Timber Properties*.
- Where possible, termite management requirements outlined by AS3660.11:2014 *Termite Management Part 1: New Building Work* Figure 3.1(D).

(4) VUETRADE BRICK TIE PRODUCTS

This confirms that VUETRADE Brick Ties products i.e. Light/Medium Duty Brick Veneer Ties, Expansion Ties etc. satisfy the minimum requirement outlined by the following Australian Standard:

- VUETRADE Brick Ties and Expansion Ties have been tested by recognised external laboratory for compressive, tensile strength of wall ties and water transfer resistance in accordance with Appendix B and E of AS2699.1:2020 *Built-in components for masonry construction, Part 1: Wall Ties* and fully comply to the requirements outlined in AS2699.1:2020 and AS3700:2018.
- VUETRADE Brick Ties are manufactured in Z600 Galvanised Steel therefore meet the durability criteria as outlined in Section 3 of AS2699.1:2020.

(5) VUETRADE PRODUCT TESTING AND DESIGN CAPACITIES

This is to confirm that VUETRADE product range listed in (1), (2) and (3) were tested, regulated, and managed by VUETRADE's Technical and Engineering team based on the critical criteria as follows:

- VUETRADE products were tested fully adhering to the steps and requirements outlined in AS1649-2001 *Timber - Methods of test for mechanical fasteners and connectors - Basic working loads and characteristic strengths*;
- Design Capacities of VUETRADE products were derived and calculated based on requirements and recommendations outlined in AS1720.1-2010 *Timber Structures Part 1: Design methods* and *Part 2: Timber Properties, Technical Data* are prepared, updated and regulated by qualified engineer; VUETRADE timber products are tested and conducted in VUETRADE testing lab adhering to steps and requirements of AS1649-2001, using MTS Universal Testing Machine (Model: MTS-SANS CMT5105) and is operated by trained and qualified engineer who is fully versed with the relevant Australian Standards and Australian Building Code; The testing machine is verified and validated by a NATA registered laboratory.
- VUETRADE owned MTS Testing Machine is fully calibrated up-to-date by NATA accredited Australian Calibrating Services to Australian Standard AS2193-2005 and is certified to produce accurate data which is directly imported to Technical Data Sheet, downloadable for each product on the VUETRADE website;
- VUETRADE also source independent laboratory tests i.e. LMATS and specialised spectrometer testing to perform range of tests i.e. product material tests, galvanised coating tests, stainless grades and complex connector strength tests.

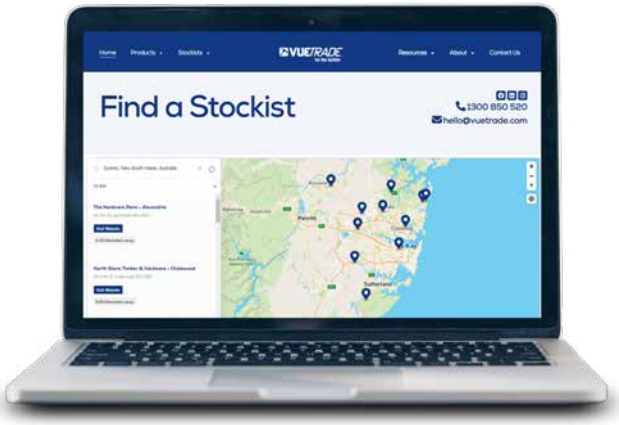

vuetrade.com

Head to **www.vuetrade.com** for the latest PDF version of this Compliance Guide, our Timber Connectors Product Guide and individual Product TDS's along with a whole other bunch of useful resources and searching tools.

VUESMART GALVANISED STRAP BRACE TENSIONERS

G

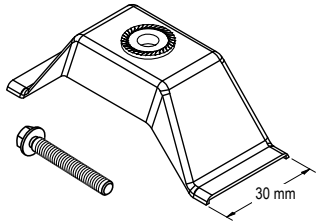

APPLICATION

VUESMART Brace Tensioners are used to provide tension to VUEBRACE Builder's Strappings, allowing wall bracing to be fully taut for effective bracing.

SIZES

Product Code	Unit	Box Qty
VUESMART	Pack of 6 + BONUS Hex Drive	25
VUESMARTBULK	Bulk Box: Pack of 10	15

INSTALLATION GUIDE

1. Place VUESMART Brace Tensioner on the strap and insert the screw through one of the centre holes of the strapping.

2. Insert the screw into the nut of VUESMART Brace Tensioner and tighten using a 5/16 hex driver or standard cross-head screw driver, to pull the strap into the cupped side of the VUESMART Brace Tensioner until the strap slack is removed.

3. Strap bracing is a tension brace and is installed as a cross bracing.
When tensioning the straps, take care to ensure even tension to avoid distorting the frame.

4. Further information on bracing and installation of VUEBRACE Builder's Strapping and VUESMART Brace Tensioners can be found in the technical data sheet of VUEBRACE Builder's Strapping.

VUETRADE for the builder

VUEBRACE GALVANISED PUNCHED BUILDER'S STRAPPING

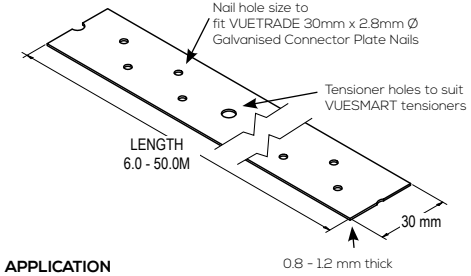

APPLICATION

VUEBRACE Builder's Strapping is used for cross-bracing wall panels, roof trusses and flooring members.

SPECIFICATION

VUEBRACE Builder's Strapping are manufactured using G300 Z275 galvanised steel, fully compliant to material and corrosion protection requirement stipulated in AS1684.2:2021 and AS1684.3:2021, as well as AS1684.4-2010.

For further information about this products net sectional area compliance see Page 133.

FASTENERS

Nails: Use only VUETRADE 30mm x 2.8mm Ø Galvanised Connector Plate Nails

SIZES

Product Code	Size (mm)	Roll length (m)
VB3086	30 x 0.8	6
VB30815	30 x 0.8	15
VB30830	30 x 0.8	30
VB30850	30 x 0.8	50
VB3016	30 x 1.0	6
VB30115	30 x 1.0	15
VB30130	30 x 1.0	30
VB30150	30 x 1.0	50
VB301230	30 x 1.2	30
VB301250	30 x 1.2	50

METAL STRAPS – TENSIONED

(Bracing Capacity of 1.5kN/m),
Table 8.18 (b) from AS1684.2:2021 / AS1684.3:2021,
as well as AS1684.4-2010 Table 8.3(b)

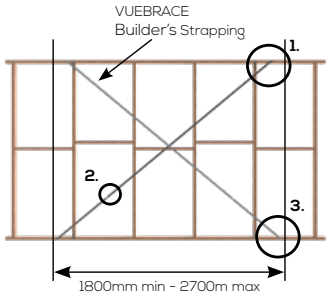

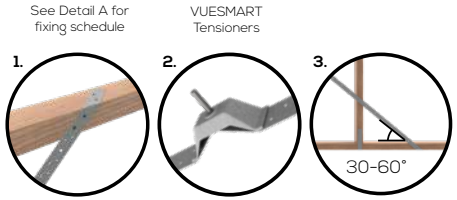

Table 1: Bracing capacity (kN) for different bracing length (m)

Wall height (m)	Bracing Length (m)									
	1.8	1.9	2.0	2.1	2.2	2.3	2.4	2.5	2.6	2.7
2.7	2.7	2.9	3.0	3.2	3.3	3.5	3.6	3.8	3.9	4.1
3.0	2.4	2.6	2.7	2.8	3.0	3.1	3.2	3.4	3.5	3.6

FIXING DETAILS A

WRAP OVER OR FACE FIXED

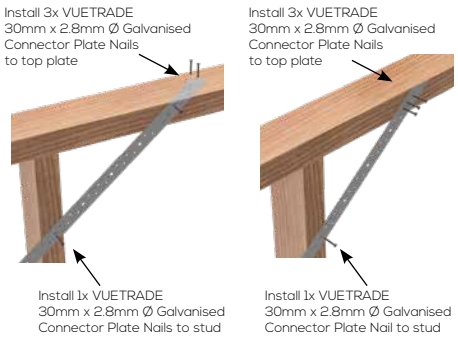

Bellevue Group Australasia are continuously working to develop and improve our product range.
We reserve the right to change specifications, etc. without notice. For our full disclaimer, refer to page 2.

VUETRADE for the builder

METAL STRAPS – TENSIONED – WITH STUD STRAPS

(Bracing Capacity of 3.0kN/m),
Table 8.18(d) from AS1684.2:2021 / AS1684.3:2021,
as well as AS1684.4-2010 Table 8.3(d)

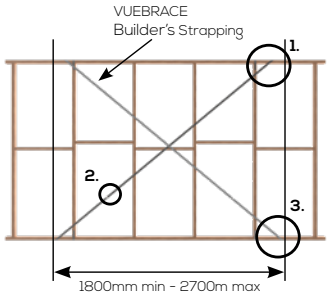

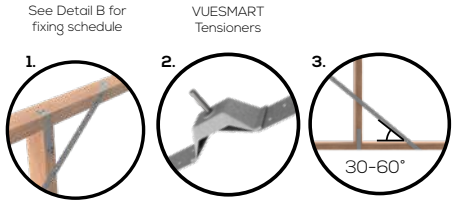

Table 2: Bracing capacity (kN) for different bracing length (m)

Wall height (m)	Bracing Length (m)									
	1.8	1.9	2.0	2.1	2.2	2.3	2.4	2.5	2.6	2.7
2.7	5.4	5.7	6.0	6.3	6.6	6.9	7.2	7.5	7.8	8.1
3.0	4.9	5.1	5.4	5.7	5.9	6.2	6.5	6.8	7.0	7.3

FIXING DETAILS B

WRAP OVER

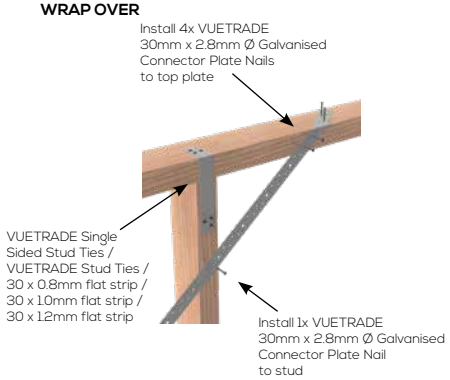

BRACING CAPACITY AND HEIGHT MODIFICATION

Values shown in Table 1 & Table 2 above are valid for the wall heights stated. For wall heights greater than 2.7m, the capacity should be multiplied by values from Table 3.

Table 3: Bracing wall capacity / height multiplier

BRACING WALL CAPACITY / HEIGHT MULTIPLIER	
Wall Height, mm	**Multiplier**
3 000	0.90
3 300	0.80
3 600	0.75
3 900	0.70
4 200	0.64

DESIGN CAPACITY DATA

Table 4: VUEBRACE Builder's Strapping design capacity data

Brace Dimensions (Width x Thickness)	Tension Capacities (kN)
30mm x 0.8mm	6.3
30mm x 1.0mm	8.6
30mm x 1.2mm	11.2

Design capacities in Table 4 are obtained under test conditions.

*tensioner sold separately

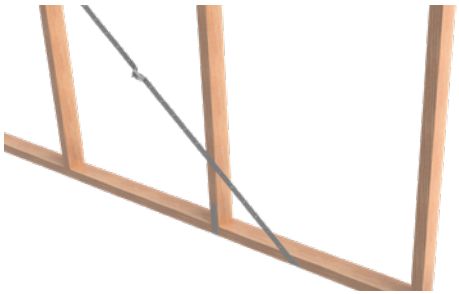

GALVANISED

VUETRADE Timber Connectors is a division of **Bellevue Group Australasia**
technical@bellevuegroup.com.au **1300 850 520** www.vuetrade.com

VUETRADE for the builder

VUEBRACE GALVANISED PUNCHED BUILDER'S STRAPPING STRIPS

G

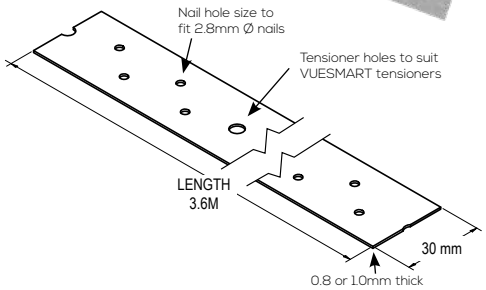

APPLICATION

VUEBRACE Punched Builder's Strapping Strips are a galvanised tension bracing used to brace roofs, walls, ceilings and floors, supplied in pre-cut lengths for your convenience.

SPECIFICATION

VUEBRACE Punched Builder's Strapping Strips are manufactured using G300 Z275 galvanised steel. VUEBRACE Punched Builder's Strapping Strips complies with material and corrosion protection requirement stipulated in AS1684.2:2021, AS1684.3:2021 and AS1684.4-2010.

For further information about this products net sectional area compliance see Page 133.

FASTENERS

Nails: Use only VUETRADE 30mm x 2.8mm Ø Galvanised Connector Plate Nails

SIZES

Product Code	Size (mm)	Length (m)	Pack Qty
VB30836	30 x 0.8	3.6	500
VB30136	30 x 1.0	3.6	500

METAL STRAPS – TENSIONED

(Bracing Capacity of 1.5kN/m),
Table 8.18 (b) from AS1684.2:2021 / AS1684.3:2021,
as well as AS1684.4-2010 Table 8.3(b)

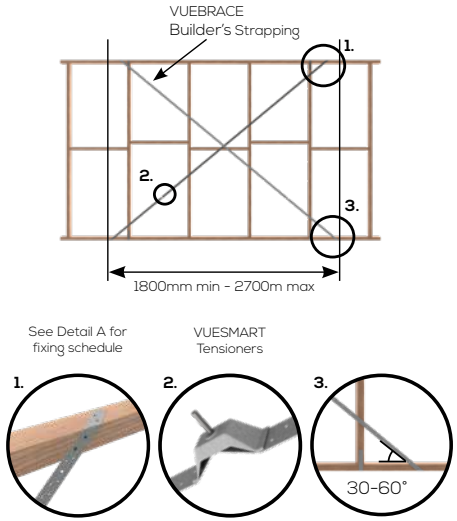

Table 5: Bracing capacity (kN) for different bracing length (m)

Wall height (m)	Bracing Length (m)									
	1.8	1.9	2.0	2.1	2.2	2.3	2.4	2.5	2.6	2.7
2.7	2.7	2.9	3.0	3.2	3.3	3.5	3.6	3.8	3.9	4.1
3.0	2.4	2.6	2.7	2.8	3.0	3.1	3.2	3.4	3.5	3.6

FIXING DETAILS A

WRAP OVER OR FACE FIXED

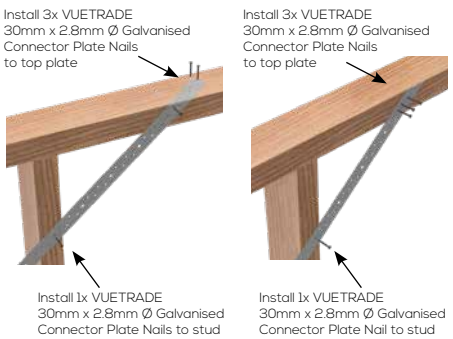

Bellevue Group Australasia are continuously working to develop and improve our product range.
We reserve the right to change specifications, etc. without notice. For our full disclaimer, refer to page 2.

VUETRADE for the builder

Timber Connectors
Compliance Data

METAL STRAPS – TENSIONED – WITH STUD STRAPS

(Bracing Capacity of 3.0kN/m),
Table 8.18(d) from AS1684.2:2021 / AS1684.3:2021,
as well as AS1684.4-2010 Table 8.3(d)

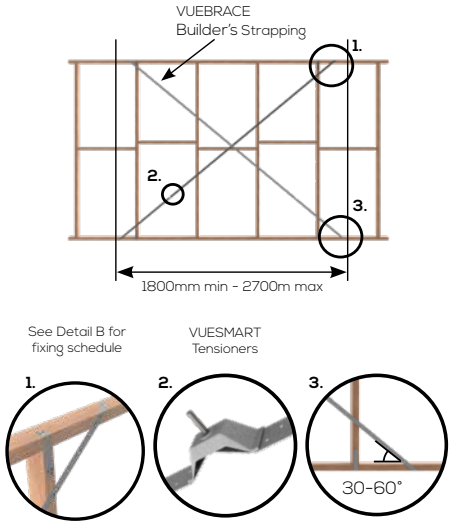

Table 6: Bracing capacity (kN) for different bracing length (m)

Wall height (m)	Bracing Length (m)									
	1.8	1.9	2.0	2.1	2.2	2.3	2.4	2.5	2.6	2.7
2.7	5.4	5.7	6.0	6.3	6.6	6.9	7.2	7.5	7.8	8.1
3.0	4.9	5.1	5.4	5.7	5.9	6.2	6.5	6.8	7.0	7.3

FIXING DETAILS B

WRAP OVER

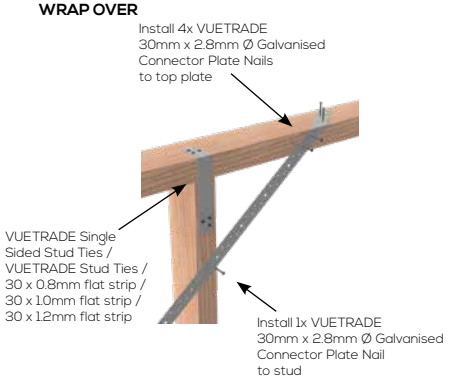

BRACING CAPACITY AND HEIGHT MODIFICATION

Values shown in Table 5 & Table 6 are valid for the wall heights stated. For wall heights greater than 2.7m, the capacity should be multiplied by a value the following table.

Table 7: Bracing wall capacity / height multiplier

BRACING WALL CAPACITY / HEIGHT MULTIPLIER	
Wall Height (mm)	**Multiplier**
3 000	0.90
3 300	0.80
3 600	0.75
3 900	0.70
4 200	0.64

DESIGN CAPACITY DATA

Table 8: VUEBRACE Punched Builder's Strapping Strips design capacity

Brace Dimensions (Width x Thickness)	Tension Capacities (kN)
30mm x 0.8mm	6.3
30mm x 1.0mm	8.6

Design capacities in Table 8 are obtained under test conditions.

*tensioner sold separately

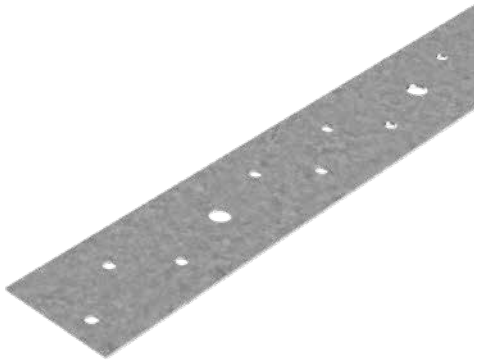

GALVANISED

VUETRADE for the builder

VUEBRACE GALVANISED LIGHT DUTY STRAPPING

G

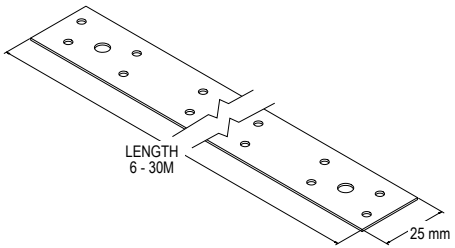

APPLICATION

VUEBRACE Light Duty Strapping is used for bracing outdoor fences where no heavy loads or wind uplifts are present.

SPECIFICATION

VUEBRACE Light Duty Strapping is manufactured using G300 Z275 galvanised steel.

FASTENERS

Nails: Use only VUETRADE 30mm x 2.8mm Ø Galvanised Connector Plate Nails

SIZES

Product Code	Size (mm)	Roll length (m)
VB2566	25 x 0.6	6
VB25615	25 x 0.6	15
VB25630	25 x 0.6	30
VB25815	25 x 0.8	15
VB25830	25 x 0.8	30

DESIGN CAPACITY DATA

Table 9: VUEBRACE Light Duty Strapping design capacity data

Brace Dimensions (Width x Thickness)	Tensile capacities (kN)
25mm x 0.6mm	3.7
25mm x 0.8mm	4.7

Note: Design capacities above are obtained under test conditions.

IMPORTANT NOTICE:

VUEBRACE Light Duty Strapping shall not be used as structural bracing of wall and roof. AS1684 requires bracing of minimum cross-sectional size of 30mm x 0.8mm which VUEBRACE Light Duty does not qualify.

VUETRADE for the builder

VUEBRACE GALVANISED UNPUNCHED BUILDER'S STRAPPING

G

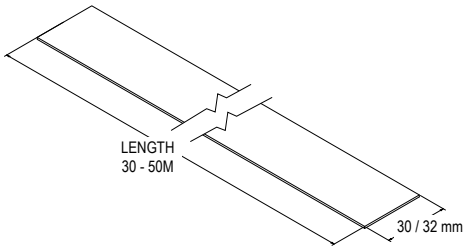

APPLICATION

VUEBRACE Unpunched Builder's Strapping is a multipurpose steel strap for general bracing of non-structural applications. VUEBRACE Unpunched Builder's Strapping can be used, on carport and pergola constructions and general tie-down applications as specified in AS1684.2:2021 & AS16840.3:2021

SPECIFICATION

VUEBRACE Unpunched Builder's Strapping is manufactured using G300 Z275 galvanised steel.

FASTENERS

Nails: Use only VUETRADE 30mm x 2.8mm Ø Galvanised Connector Plate Nails

SIZES

Product Code	Size (mm)	Roll length (m)
VB30830UP	30mm x 0.8mm	30
VB301230UP	30mm x 1.2mm	30
Also available by custom order:		
VB321230UP	32mm x 1.2mm	30
VB321250UP	32mm x 1.2mm	50

DESIGN CAPACITY DATA

Table 10: VUEBRACE Unpunched Builder's Strapping design capacity data

Brace Dimensions (Width x Thickness)	Max Tension (kN)
30mm x 0.8mm	8.8
30mm x 1.2mm	12.8

NOTES:

1. Design capacities above are obtained under test conditions.
2. VUEBRACE Unpunched Builder's Strapping is not suitable for structural bracing. Use Punched VUEBRACE Builder's Strapping for structural bracing application.
3. Ensure installation of Unpunched Builder's Strapping either by punching nails/screws through or any means of strapping do not compromise the materials. Ensure that fasteners be evenly spaced out and avoid driving nails too close to the edge of the material where material tear could occur prematurely.

VUETRADE for the builder

GALVANISED ANGLE BRACE

G

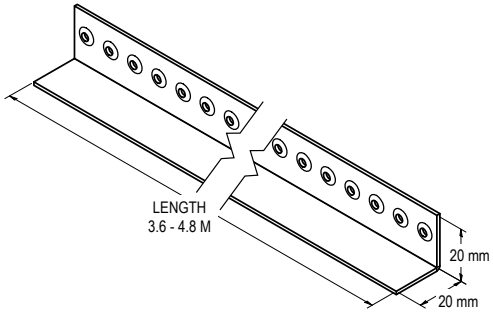

APPLICATION

VUETRADE Angle Brace are typically used for bracing of timber framed walls in accordance with AS1684.2:2021, AS1684.3:2021, AS1684.4:2010.

SPECIFICATION

VUEBRACE Angle Brace are manufactured using G300 Z275 galvanised steel, fully compliant to material and corrosion protection requirement stipulated in AS1684.2 and AS1684.3, as well as AS1684.4.

FASTENERS

Nails: Use only VUETRADE 30mm x 2.8mm Ø Galvanised Connector Plate Nails

SIZES

Product Code	Length (m)	Pack Qty
ANGLE3610	3.6	10
ANGLE4210	4.2	10
ANGLE4810	4.8	10

INSTALLATION GUIDE

ANGLE BRACE

(Bracing Capacity of 1.5kN/m),
Table 8.18 (c) AS1684.2:2021 / AS1684.3:2021, as well as AS1684.4-2010 Table 8.3(c)

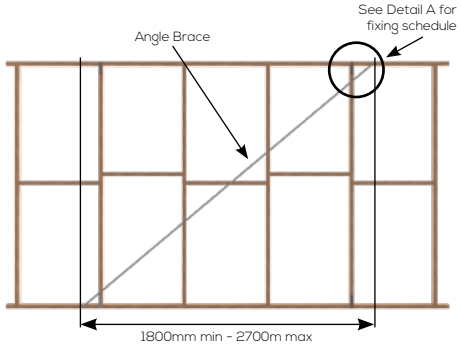

Bellevue Group Australasia are continuously working to develop and improve our product range.
We reserve the right to change specifications, etc. without notice. For our full disclaimer, refer to page 2.

VUETRADE for the builder

Timber Connectors
Compliance Data

FIXING DETAIL A

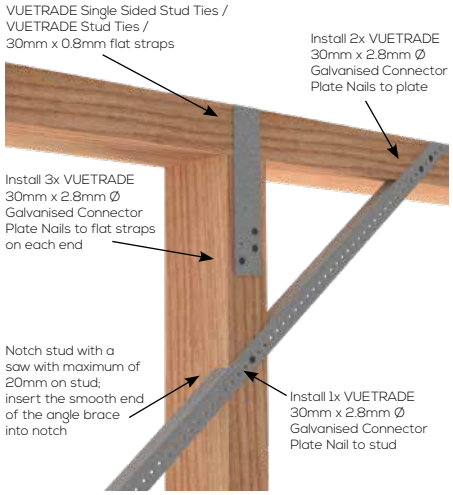

Values shown in table above are valid for the wall heights stated. For wall heights greater than 2.7m, the capacity should be multiplied by value in Table 11.

Table 11: Angle Brace wall capacity / height multiplier

BRACING WALL CAPACITY / HEIGHT MULTIPLIER	
Wall Height (mm)	**Multiplier**
3 000	0.90
3 300	0.80
3 600	0.75
3 900	0.70
4 200	0.64

DESIGN CAPACITY

Table 12: VUETRADE Angle Brace design capacities

VUETRADE Angle Brace	Tension Capacities (kN)
	7.5 kN

Note: Design capacities in Table 12 are obtained under test conditions.

IMPORTANT NOTICE:

As products are continuously subjected to improvements and modifications to be constantly compliant to strict Australian Standards, VUETRADE may change/modify the product description and specification without notice. VUETRADE advice users to constantly keep up to date on the latest design specifications are being used.

BRACING CAPACITY AND HEIGHT MODIFICATION

Angle Brace installed following specification from AS1684.2:2021/ AS1684.3:2021 Table 8.18(c) would have the following bracing capacity shown in Table 13 below

Table 13: Angle Brace bracing capacity

Wall height (m)	Bracing Length (m)									
	1.8	1.9	2.0	2.1	2.2	2.3	2.4	2.5	2.6	2.7
2.7	2.7	2.9	3.0	3.2	3.3	3.5	3.6	3.8	3.9	4.1
3.0	2.4	2.6	2.7	2.8	3.0	3.1	3.2	3.4	3.5	3.6

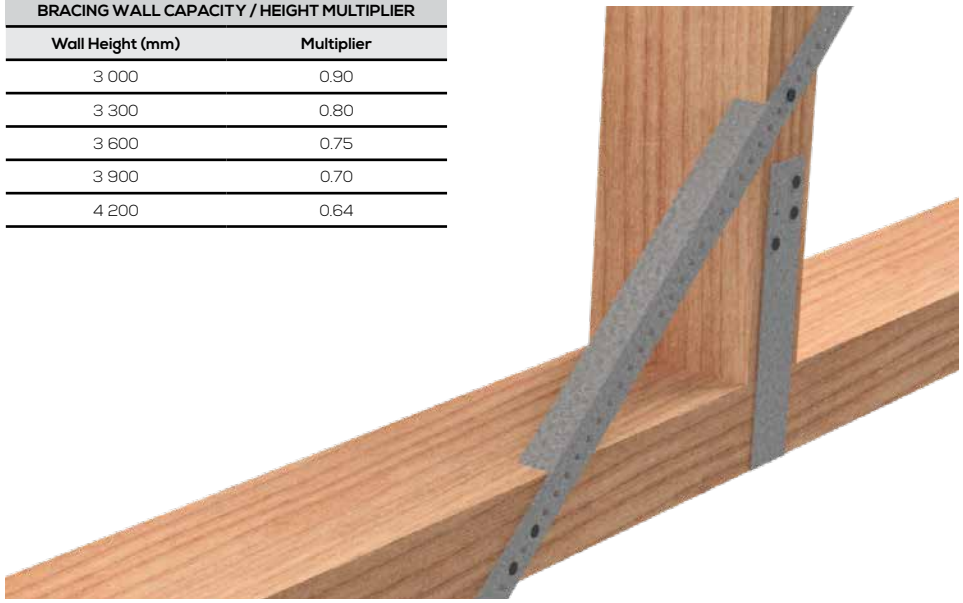

VUETRADE Timber Connectors is a division of **Bellevue Group Australasia**
technical@bellevuegroup.com.au **1300 850 520** www.vuetrade.com

VUETRADE for the builder

GALVANISED SPEED BRACE

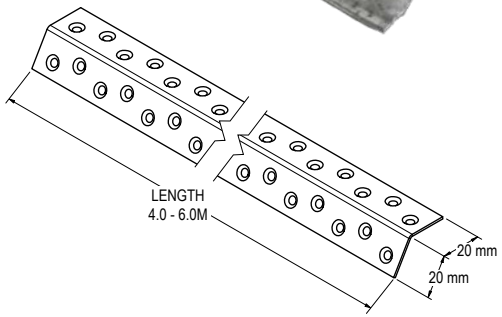

APPLICATION

VUETRADE Speed Brace are a pre-punched, rigid bracing used for top chord roof bracing. Manufactured and pre-formed angle for easy installation and guarantees excellent tension capacity.

Pre-punched for quick and easy installation, VUETRADE Speed Brace provides solution for resisting bucking in the trusses, as well as from the wind uplift.

SPECIFICATION

VUETRADE Speed Brace is manufactured using 40mm x 1.0mm thick G300 Z275 galvanised steel to meet AS4440-2004 requirements.

FASTENERS

Nails: Use only VUETRADE 30mm x 2.8mm Ø Galvanised Connector Plate Nails

Detailed installation illustration is given in the following section of this document. AS4440-2004 shall be read in conjunction with this document for further fixing details and installation guide.

PRODUCT SIZES

Product Code	Size (m)	Pack Quantity
SPEED410	4.0	10
SPEED510	5.0	10
SPEED610	6.0	10

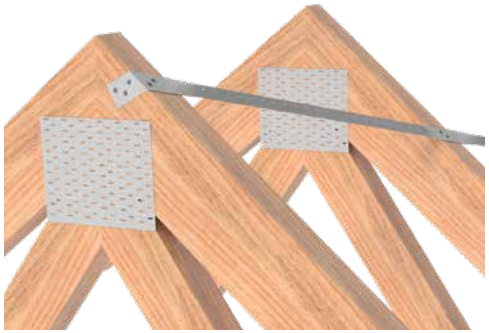

Bellevue Group Australasia are continuously working to develop and improve our product range.
We reserve the right to change specifications, etc. without notice. For our full disclaimer, refer to page 2.

VUETRADE for the builder

INSTALLATION AND NAILING SCHEDULE (ROOF BRACING)

Install VUETRADE Speed Brace following the installation methods detailed below, further installation guides and fixing details shall refer to the Australian Standard AS4440-2004 – *Installation of nailplated timber roof trusses.*

END FIXING AT APEX INSTALLATION

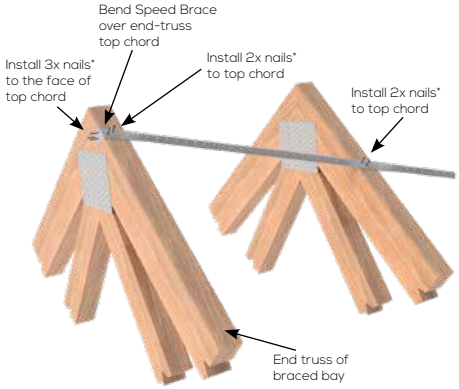

SPEED BRACE SPLICING INSTALLATION

LAP SPLICE

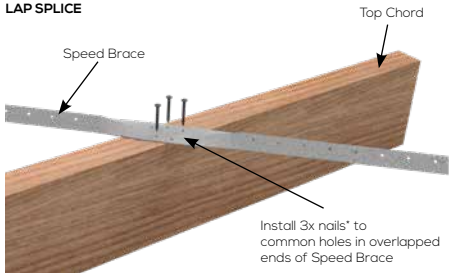

WRAP AROUND SPLICE

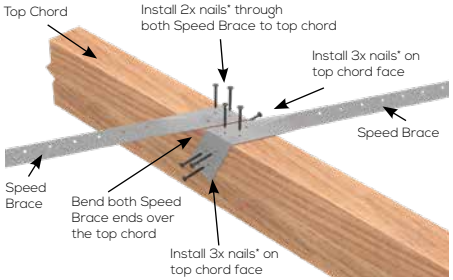

END FIXING DETAILS AT HEEL TO TOP PLATE

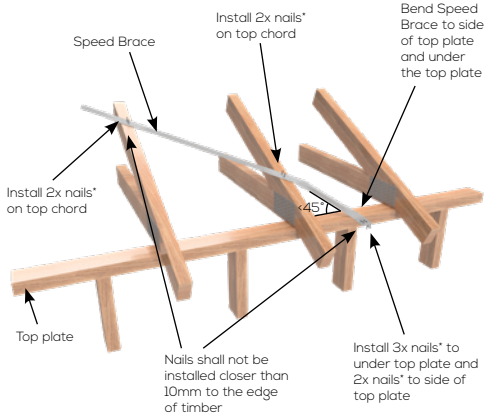

* Use only VUETRADE 30mm x 2.8mm Ø Galvanised Connector Plate Nails.

DESIGN CAPACITIES

VUETRADE Speed Brace has been tested to meet the tension capacity requirements outlined in AS4440-2004 - *Installation of nailplated timber roof trusses* for steelbrace, with design capacity shown in Table 14.

Table 14: Design capacity of VUETRADE Speed Brace

Product	Product Size	Design Capacity, kN
VUETRADE Speed Brace	20 x 20mm x 1.0mm thickness	9.63 kN

NOTES:

1. Design Capacity obtained in Table 14 is obtained via test and computated by VUETRADE following requirements outlined in relevant Australian Standards.
2. To achieve tabulated design capacity, VUETRADE Speed Brace must be installed in accordance to the installation methods listed in this document or to specifications listed in AS4440-2004.
3. Use only VUETRADE 30mm x 2.8mm Ø Galvanised Connector Plate Nails to fasten Speed Brace to roof truss / top chord to achieve design capacity.

VUETRADE for the builder

GALVANISED JOIST HANGERS

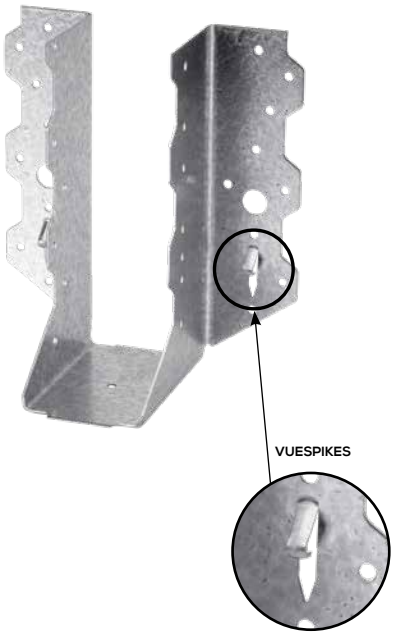

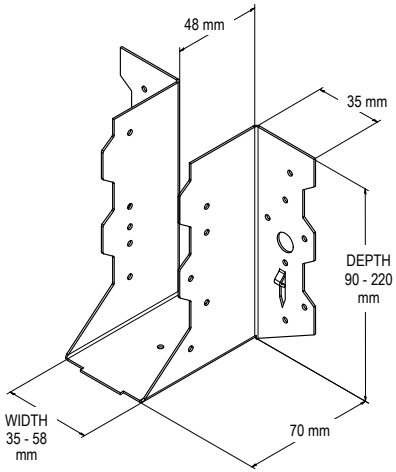

APPLICATION

VUETRADE Galvanised Joist Hangers are manufactured with VUESPIKES for easy and fast installation.

SPECIFICATION

VUETRADE Galvanised Joist Hangers are manufactured from G300 Z275 galvanised steel in 1.0 mm thickness (TCT).

FASTENERS

Nails: Use only VUETRADE 30mm x 2.8mm Ø Galvanised Connector Plate Nails

SIZES

Product Code	Nominal Size (mm)	Box Qty
VJH3590	35 x 90	45
VJH35120	35 x 120	30
VJH35140	35 x 140	30
VJH35180	35 x 180	30
VJH3890	38 x 90	45
VJH38120	38 x 120	30
VJH38140	38 x 140	30
VJH38180	38 x 180	30
VJH4590	45 x 90	45
VJH45120	45 x 120	30
VJH45140	45 x 140	30
VJH45180	45 x 180	30
VJH45220	45 x 220	20
VJH5090	50 x 90	45
VJH50120	50 x 120	30
VJH50140	50 x 140	30
VJH50180	50 x 180	30
VJH50220	50 x 220	20
VJH58180	58 x 180	30

Bellevue Group Australasia are continuously working to develop and improve our product range.
We reserve the right to change specifications, etc. without notice. For our full disclaimer, refer to page 2.

INSTALLATION GUIDE

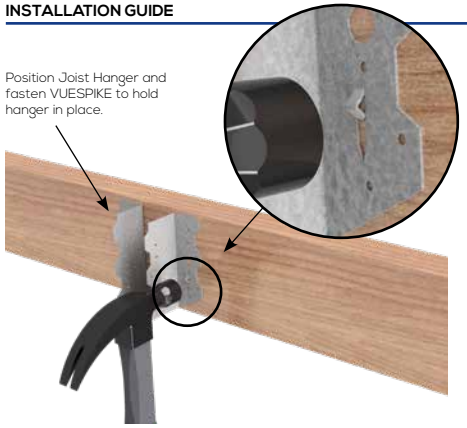

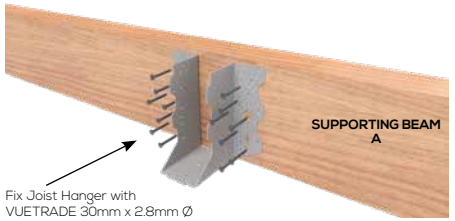

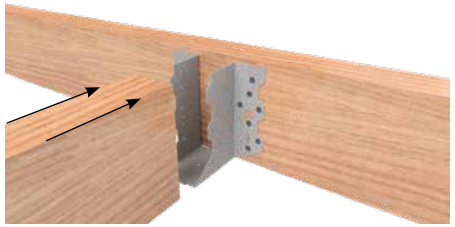

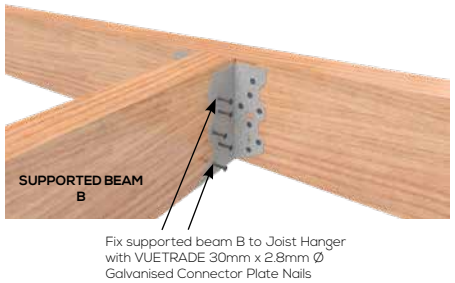

1. Suitable size Joist Hanger shall be selected using size table on previous page, ensuring sufficient hanger depth is provided for different joist / beam sizes.
2. Joist Hanger should be fixed to the supporting member first. It can be quickly and easily held in place by VUESPIKES before fastening hanger with nails.
3. Fix VUETRADE 30mm x 2.8mm Ø Galvanised Connector Plate Nails through Joist Hanger to supporting beam, using the recommended number of nails in Table 15.
4. Install supported beam (usually floor beams / joists) to hangers and fasten supported beams with VUETRADE 30mm x 2.8mm Ø Galvanised Connector Plate Nails, using recommended number of nails in Table 15.
5. Installation of bolts on Joist Hangers is permitted. Please contact VUETRADE for more information for risks and considerations along with installation guide and design capacities.

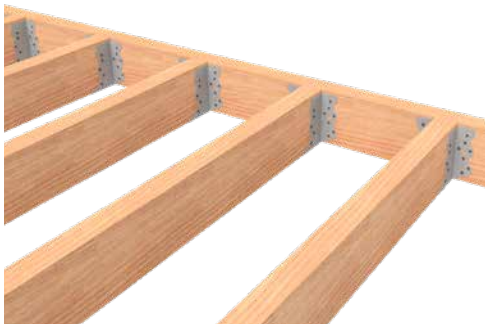

VUETRADE Timber Connectors is a division of **Bellevue Group Australasia**
technical@bellevuegroup.com.au **1300 850 520** www.vuetrade.com

VUETRADE for the builder

DESIGN CAPACITY DATA

Table 15: Design Capacity data for nail fixing of Joist Hanger

Sizes	Number of Nails		Type of load	Joint Group					
	Fixing on supporting Beam A	Fixing on supported Beam B		J3	J4	J5	JD3	JD4	JD5
90mm	10	8	Dead Load	3.9	2.7	2.1	5.4	3.9	3.2
			Dead Load + Floor Live Load	4.7	3.3	2.5	6.5	4.7	3.8
			Dead Load + Roof Live Load	5.2	3.7	2.8	7.3	5.2	4.3
			Dead Load + Wind Load	6.2	4.4	3.3	8.7	6.2	5.1
120mm	14	10	Dead Load	4.8	3.4	2.5	7.1	5.0	4.1
			Dead Load + Floor Live Load	5.8	4.1	3.1	8.5	6.1	5.0
			Dead Load + Roof Live Load	6.4	4.5	3.4	9.5	6.8	5.6
			Dead Load + Wind Load	7.7	5.5	4.1	10.8	7.7	6.3
140mm	18	12	Dead Load	5.8	4.1	3.1	8.9	6.4	5.2
			Dead Load + Floor Live Load	7.1	5.0	3.8	10.8	7.7	6.3
			Dead Load + Roof Live Load	7.9	5.6	4.2	12.0	8.6	7.1
			Dead Load + Wind Load	8.6	6.1	4.6	11.4	8.2	6.7
180mm	22	14	Dead Load	6.8	4.8	3.6	10.7	7.7	6.3
			Dead Load + Floor Live Load	8.2	5.8	4.4	13.0	9.3	7.6
			Dead Load + Roof Live Load	9.2	6.5	4.9	14.5	10.3	8.5
			Dead Load + Wind Load	9.1	6.4	4.9	13.9	9.9	8.1
220mm	26	18	Dead Load	7.9	5.6	4.2	12.4	8.9	7.3
			Dead Load + Floor Live Load	9.6	6.8	5.1	15.1	10.8	8.8
			Dead Load + Roof Live Load	10.7	7.5	5.7	16.8	12.0	9.8
			Dead Load + Wind Load	12.6	8.9	6.7	16.0	11.4	9.4

NOTES:

- Modification factors k1 for different load cases in the design capacities of Table 15 are adopted from AS1720.1-2010.
- Design capacities in Table 15 are based on Category 1 joints where it is applicable for failures that would be unlikely to affect an area of greater than 25m2. For Category 2 and Category 3 joints, design capacities from the table are multiplied by 0.941 and 0.882 respectively.
- NEVER punch nails through sheet metal as it results in weaker, non-compliant connections.

VUETRADE for the builder

GALVANISED SPLIT JOIST HANGERS

G

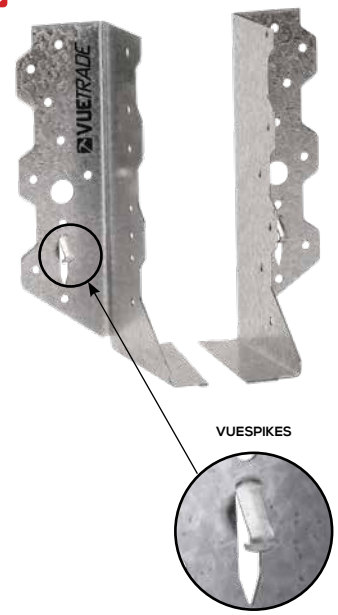

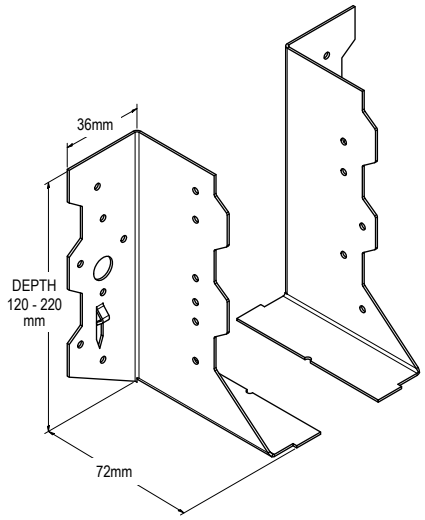

APPLICATION

VUETRADE Split Joist Hangers are fast fixing, multi-purpose hangers for joist, beam and truss connections where timber is over the width of 50mm, to be installed as a pair.

SPECIFICATION

VUETRADE Galvanised Split Joist Hangers are Australian Made with a galvanised finish (G300 Z275).

FASTENERS

Nails: Use only VUETRADE 30mm x 2.8mm Ø Galvanised Connector Plate Nails

SIZES

Product Code	Size (mm)	Box Qty
VSJH120	120	30 pairs
VSJH140	140	30 pairs
VSJH180	180	30 pairs
VSJH220	220	20 pairs

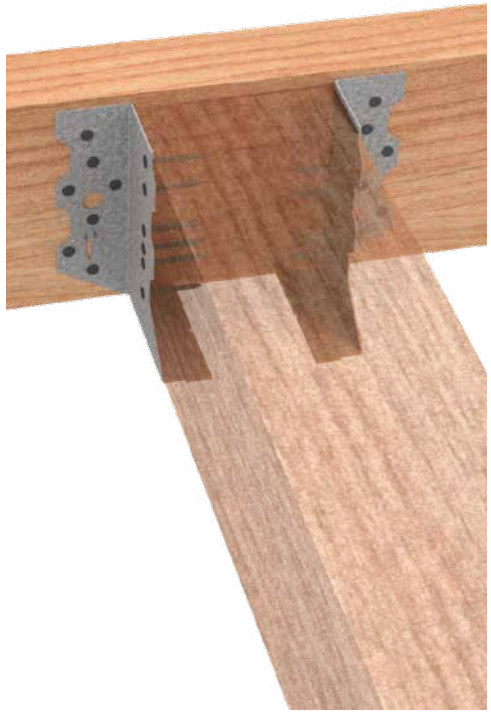

INSTALLATION GUIDE

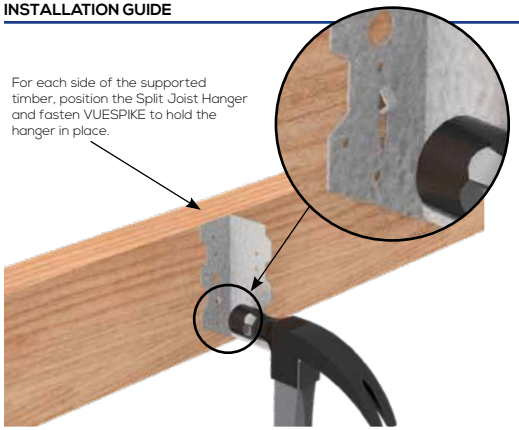

1. Suitable size Split Joist Hanger shall be selected using Product Sizes table on previous page, ensuring sufficient hanger depth is provided for different joist / beam sizes.
2. Both sides of the Split Joist Hanger should be fixed to the supporting member first. It can be quickly and easily held in place by VUESPIKES before fastening hanger with nails.
3. Fix VUETRADE 30mm x 2.8mm Ø Galvanised Connector Plate Nails through Split Joist Hanger to supporting beam, using the recommended number of nails in Table 16.
4. Install supported beam (usually floor beams / joists) to hangers and fasten supported beams with VUETRADE 30mm x 2.8mm Ø Galvanised Connector Plate Nails, using recommended number of nails listed in Table 16.

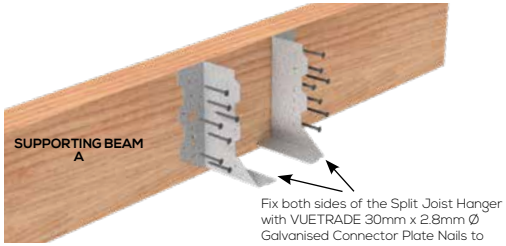

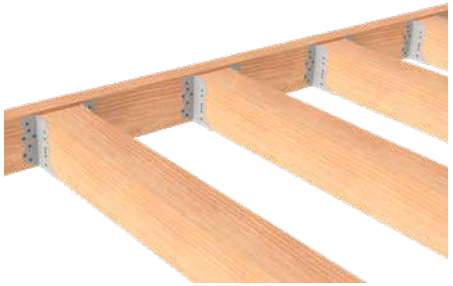

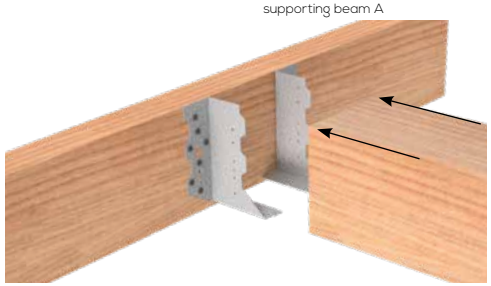

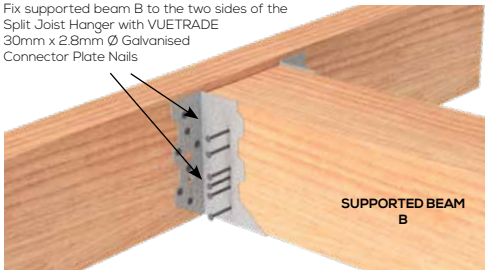

Bellevue Group Australasia are continuously working to develop and improve our product range.
We reserve the right to change specifications, etc. without notice. For our full disclaimer, refer to page 2.

DESIGN CAPACITY DATA

Table 16: Design capacity data for Split Joist Hanger [used in pairs]

Sizes	Number of Nails		Type of load	Joint Group					
	Fixing on supporting Beam A	Fixing on supported Beam B		J3	J4	J5	JD3	JD4	JD5
120mm	14 (7 on each side)	11 (6 on left, 5 on right)	Dead Load	4.0	2.8	2.1	5.6	4.0	3.3
			Dead Load + Floor Live Load	4.8	3.4	2.6	6.3	4.8	4.0
			Dead Load + Roof Live Load	5.4	3.8	2.9	7.6	5.4	4.4
			Dead Load + Wind Load	8.0	5.7	4.3	11.2	8.0	6.6
140mm	18 (9 on each side)	13 (7 on left, 6 on right)	Dead Load	4.7	3.3	2.5	6.6	4.7	3.8
			Dead Load + Floor Live Load	5.7	4.0	3.0	7.9	5.7	4.6
			Dead Load + Roof Live Load	6.3	4.5	3.4	8.8	6.3	5.2
			Dead Load + Wind Load	9.4	6.6	5.0	13.1	9.4	7.7
180mm	22 (11 on each side)	15 (8 on left, 7 on right)	Dead Load	5.4	3.8	2.9	7.5	5.4	4.4
			Dead Load + Floor Live Load	6.5	4.6	3.5	9.1	6.5	5.3
			Dead Load + Roof Live Load	7.2	5.1	3.9	10.1	7.2	5.9
			Dead Load + Wind Load	10.7	7.6	5.7	15.0	10.7	8.8
220mm	26 (13 on each side)	17 (9 on left, 8 on right)	Dead Load	6.0	4.3	3.2	8.4	6.0	4.9
			Dead Load + Floor Live Load	7.3	5.2	3.9	10.2	7.3	6.0
			Dead Load + Roof Live Load	8.1	5.7	4.3	11.4	8.1	6.7
			Dead Load + Wind Load	12.0	8.5	6.4	15.8	12.0	9.9

NOTES:

1. Design capacities in Table 16 are for VUETRADE 30mm x 2.8mm Ø Galvanised Connector Plate Nails only. Design capacities are determined based on the number of nails in each Split Joist Hanger.
2. Modification factors k1 for different load cases are adopted from AS1720.1-2010.
3. Design capacities in the Table 16 are based on Category 1 joints where it is applicable for failures that would be unlikely to affect an area of greater than 25m2. For Category 2 and Category 3 joints, design capacities from the table are multiplied by 0.941 and 0.882 respectively.
4. NEVER punch nails through sheet metal as it results in weaker, non-compliant connections.
5. Split Joist Hanger capacities are capped at 15.8kN for steel failure.

GALVANISED

VUETRADE Timber Connectors is a division of **Bellevue Group Australasia**
technical@bellevuegroup.com.au **1300 850 520** www.vuetrade.com

VUETRADE for the builder

GALVANISED TRIPLE GRIPS

VTTGLH

VTTGRH

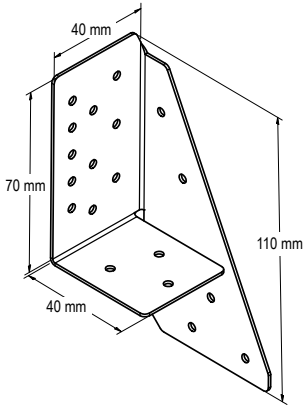

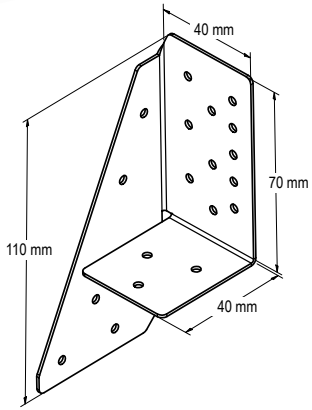

APPLICATION

VUETRADE Galvanised Triple Grips are used in nail fixed timber joints, mainly for ones that are perpendicular to each other.

SPECIFICATION

VUETRADE Galvanised Triple Grip are manufactured from G300 Z275 galvanised steel in 1.0mm thickness.

FASTENERS

Nails: Use only VUETRADE 30mm x 2.8mm Ø Galvanised Connector Plate Nails

Recommended numbers of nails per bracket / joint are showed in the next section.

Note: Triple grips shall only be hand driven, usage of nail guns and machine-driven nails is strictly NOT recommended.

SIZES

Product Code	Description	Box Qty
VTTGLH	Left Hand	100
VTTGRH	Right Hand	100

Bellevue Group Australasia are continuously working to develop and improve our product range.
We reserve the right to change specifications, etc. without notice. For our full disclaimer, refer to page 2.

VUETRADE for the builder

INSTALLATION GUIDE

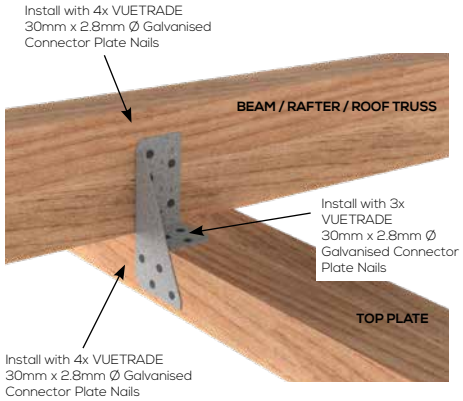

1. Use only VUETRADE 30mm x 2.8mm Ø Galvanised Connector Plate Nails when installing Galvanised Triple Grips.
2. Install nails through designated holes, do not drive nails through sheet material.
3. Usage of stainless steel nails with Galvanised Triple Grips may result in bimetallic corrosion which will reduce the grip design capacity.

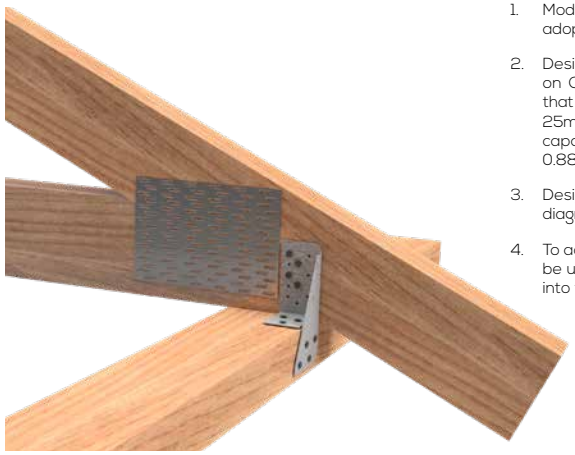

DESIGN CAPACITY DATA

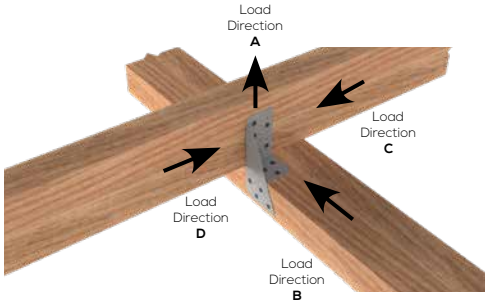

Table 17: Design Capacity for dead loads

Load Directions	Design Capacity for Timber Joint Groups, kN					
	J3	J4	J5	JD3	JD4	JD5
A	1.5	1.1	0.8	2.2	1.5	1.3
B	2.7	1.9	1.4	3.8	2.7	2.2
C/D	1.5	1.1	0.8	2.2	1.5	1.3

Table 18: Design Capacity for wind uplifts

Load Directions	Design Capacity for Timber Joint Groups, kN					
	J3	J4	J5	JD3	JD4	JD5
A	3.1	2.2	1.7	4.3	3.1	2.5
B	5.4	3.8	2.9	7.6	5.4	4.4
C/D	3.1	2.2	1.7	4.3	3.1	2.5

NOTES:

1. Modification factors k1 for different load cases are adopted from AS1720.1-2010.
2. Design capacities in the Table 17 & Table 18 are based on Category 1 joints where it is applicable for failures that would be unlikely to affect an area of greater than 25m2. For Category 2 and Category 3 joints, design capacities from the table are multiplied by 0.941 and 0.882 respectively.
3. Design capacity for different load directions is shown in diagram above
4. To achieve greater design capacity, two Triple Grips may be used for a connection or more nails may be installed into the pre-bored holes.

VUETRADE Timber Connectors is a division of **Bellevue Group Australasia**
technical@bellevuegroup.com.au **1300 850 520** www.vuetrade.com

VUETRADE for the builder

GALVANISED MULTI GRIPS

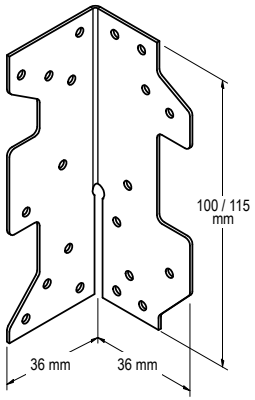

APPLICATION

VUETRADE Galvanised Multi Grips are general purpose timber framing brackets used for joining timber members at right angles. These brackets can be used on pergolas, timber rails, fences and general joinery fit out.

SPECIFICATION

VUETRADE Galvanised Multi Grips are manufactured from G300 Z275 galvanised steel in 1.0mm thickness.

FASTENERS

Nails: Use only VUETRADE 30mm x 2.8mm Ø Galvanised Connector Plate Nails

SIZES

Product Code	Length (mm)	Box Qty
VTMG100	100	200
VTMG115	115	100

INSTALLATION GUIDE

LOADING TYPE A (used as a pair)

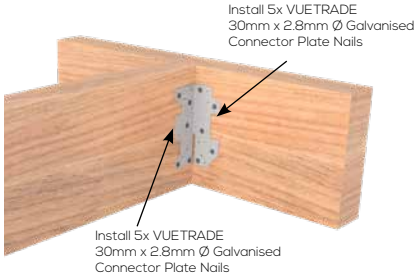

LOADING TYPE B

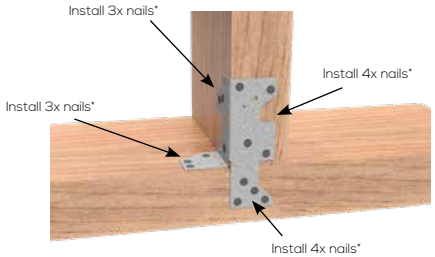

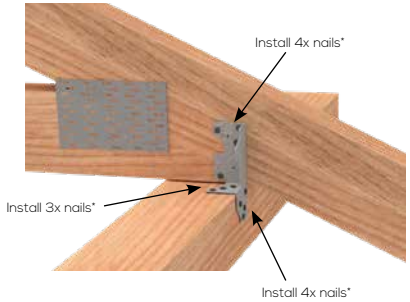

* Use only VUETRADE 30mm x 2.8mm Ø Galvanised Connector Plate Nails.

VUETRADE for the builder
Timber Connectors
Compliance Data

DESIGN CAPACITY DATA

Load ratings stated below are for when installed as a pair.

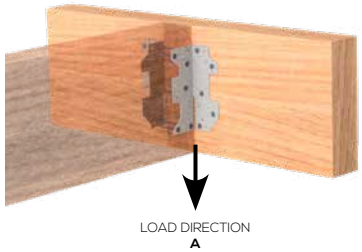

Table 19: Multi Grip Design Capacity Table – Load Direction A [used in pairs]

Load Direction	Design Capacity for Timber Joint Groups, kN					
	J3	J4	J5	JD3	JD4	JD5
Dead Load, 1.35G	3.6	2.6	1.9	5.0	3.6	3.0
Dead & Roof Live Loads, 1.2G+1.5Qr	4.4	3.1	2.3	6.2	4.4	3.6
Wind Uplift	7.3	5.1	3.9	10.2	7.3	6.0

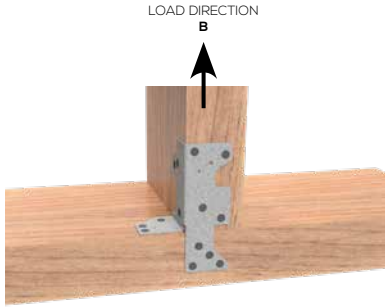

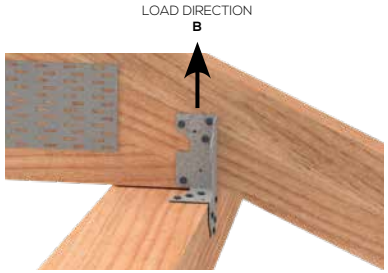

Table 20: Multi Grip Design Capacity Table – Load Direction B (10 nails for each Multi Grip)

Load Direction	Design Capacity for Timber Joint Groups, kN					
	J3	J4	J5	JD3	JD4	JD5
Wind Uplift	3.1	2.2	1.7	4.3	3.1	2.5

NOTES:

1. Design capacities in Table 19 and Table 20 apply to all sizes of VUETRADE Galvanised Multi Grips, minimum recommended nail fixings are detailed in the fixing guide section.
2. To achieve greater design capacity, more nails may be installed into the pre-bored holes. NEVER punch nails through sheet metal as it may result in weaker, non-compliant connections.
3. Capacity for load direction B can be doubled up with double the amount of Multi Grip used.
4. Design capacities in Table 19 and Table 20 are based on Category 1 joints where it is applicable for failures that would be unlikely to affect an area of greater than 25m2. For Category 2 and Category 3 joints, design capacities from the table are multiplied by 0.941 and 0.882 respectively.

VUETRADE for the builder

GALVANISED MINI GRIPS

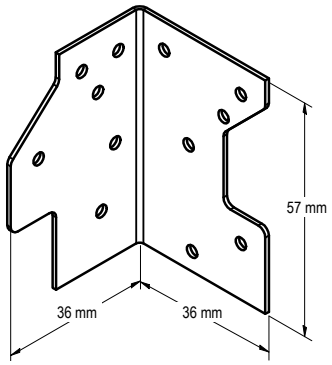

APPLICATION

VUETRADE Galvanised Mini Grips are a general purpose timber framing bracket used for joining timber members at right angles. These brackets can be used on pergolas, timber rails, fences and general joinery fit out.

SPECIFICATION

VUETRADE Galvanised Mini Grips are manufactured from G300 Z275 galvanised steel in 1.0mm thickness.

FASTENERS

Nails: Use only VUETRADE 30mm x 2.8mm Ø Galvanised Connector Plate Nails

SIZE

Product Code	Length (mm)	Box Qty
VTMG57	57	200

INSTALLATION GUIDE

For each side of the supported timber:

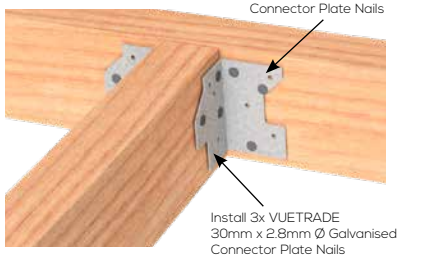

DESIGN CAPACITY DATA

Load ratings stated below are for when installed as a pair.

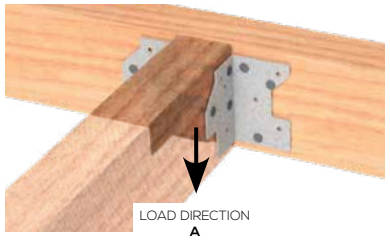

Table 21: Mini Grip Design Capacity Table – Load Direction A [used in pairs]

Load Direction	Design Capacity for Timber Joint Groups, kN					
	J3	J4	J5	JD3	JD4	JD5
Dead Load, 1.35G	2.3	1.6	1.2	3.2	2.3	1.9
Dead & Roof Live Loads, 1.2G+1.5Qr	2.8	2.0	1.5	3.9	2.8	2.3
Wind Uplift	4.6	3.3	2.5	6.5	4.6	3.8

NOTES:

1. Design capacities in Table 21 apply when the minimum recommended nail fixings are fixed, as detailed in the installation guide section.
2. To achieve greater design capacity, more nails may be installed into the pre-bored holes. NEVER punch nails through sheet metal as it may result in weaker, non-compliant connections.
3. Design capacities in Table 21 are based on Category 1 joints where it is applicable for failures that would be unlikely to affect an area of greater than 25m2. For Category 2 and Category 3 joints, design capacities from the table are multiplied by 0.941 and 0.882 respectively.

Bellevue Group Australasia are continuously working to develop and improve our product range.
We reserve the right to change specifications, etc. without notice. For our full disclaimer, refer to page 2.

VUETRADE for the builder

GALVANISED JOIST STRAPS

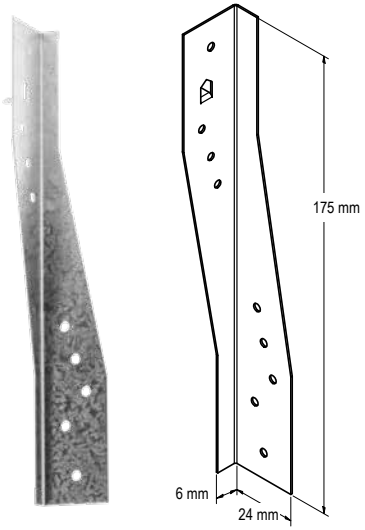

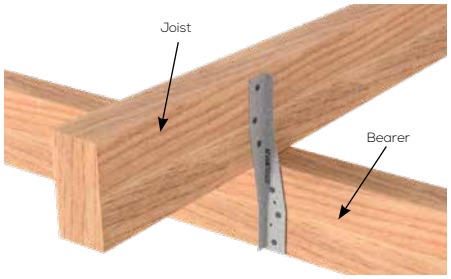

APPLICATION

VUETRADE Galvanised Joist Straps are simple connectors for fixing ceiling joists to hanging beams and rafters to beams at right angles, with VUESPIKEs for easy positioning before fixing.

SPECIFICATION

VUETRADE Galvanised Joist Straps are Australian Made and manufactured using G300 Z275 galvanised steel in 0.6mm thickness.

FASTENERS

Nails: Use only VUETRADE 30mm x 2.8mm Ø Galvanised Connector Plate Nails

SIZES

Product Code	Size (mm)	Box Qty
VTJS150	175mm	150

INSTALLATION GUIDE

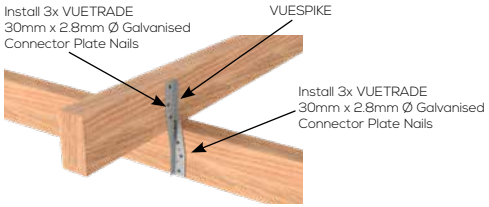

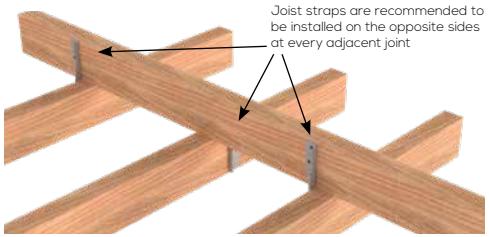

1. Position VUETRADE Galvanised Joist Straps and drive VUESPIKE into place for ease of positioning.

2. Drive VUETRADE 30mm x 2.8mm Ø Galvanised Connector Plate Nails into both timber members, using 3 nails per end.

3. Design capacity of Joist Strap will increase with more nails installed through pre-bored holes. Do not punch through sheet material as it will result in a weaker and non-compliant connection. For more information about specific design load capacities please contact VUETRADE.

DESIGN CAPACITY DATA

Table 22: Joist Strap design capacity data

Load Case	Design Capacity for Timber Joint Groups, kN					
	J3	J4	J5	JD3	JD4	JD5
DL	1.2	0.8	0.6	1.6	1.2	1.0
DL + FLL	1.4	1.0	0.7	2.0	1.4	1.2
DL + RLL	1.6	1.1	0.8	2.2	1.6	1.3
Wind Uplift	2.3	1.6	1.2	3.2	2.3	1.9

NOTES:

1. Design capacities in Table 22 are based on installing 3 nails on each end of the Joist Strap using VUETRADE 30mm x 2.8mm Ø Galvanised Connector Plate Nails only.
2. Modification factors k1 for different load cases are adopted from AS1720.1-2010.
3. Design capacities in the Table 22 are based on Category 1 joints where it is applicable for failures that would be unlikely to affect an area of greater than 25m2. For Category 2 and Category 3 joints, design capacities from the table are multiplied by 0.941 and 0.882 respectively.

VUETRADE Timber Connectors is a division of **Bellevue Group Australasia**
technical@bellevuegroup.com.au **1300 850 520** www.vuetrade.com

VUETRADE for the builder

GALVANISED HEAVY DUTY JOIST STRAPS

G

VTHDJL

VTHDJR

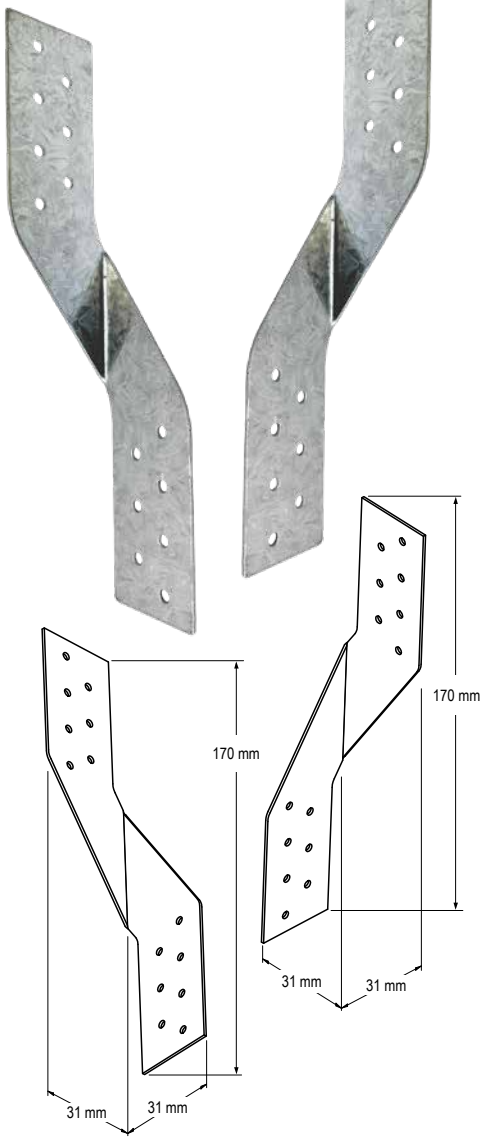

APPLICATION

VUETRADE Heavy Duty Joist Straps are a quick and effective solution for fixing ceiling joists to hanging beams, rafters to beams, and floor joists to bearers.

SPECIFICATION

VUETRADE Heavy Duty Joist Straps are manufactured from G300 Z275 galvanised steel in 1.0 mm thickness. Dimensions are available below.

FASTENERS

Nails: Use only VUETRADE 30mm x 2.8mm Ø Galvanised Connector Plate Nails

SIZES

Product Code	Nominal Size (mm)	Thickness (mm)	Description
VTHDJL	31 x 170mm	1.0	Left Hand
VTHDJR	31 x 170mm	1.0	Right Hand

Bellevue Group Australasia are continuously working to develop and improve our product range.
We reserve the right to change specifications, etc. without notice. For our full disclaimer, refer to page 2.

VUETRADE for the builder

INSTALLATION GUIDE

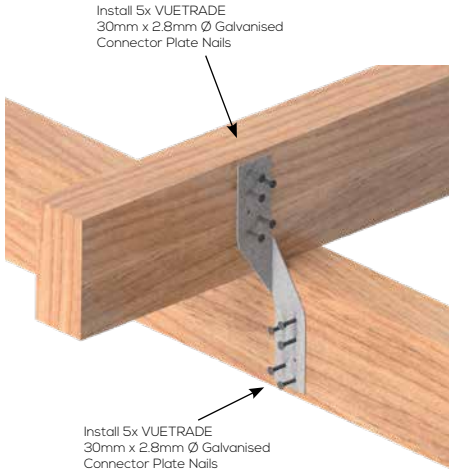

1. To achieve the design capacity as tabulated in Table 23, it is recommended that a minimum of 5x VUETRADE 30mm x 2.8mm Ø Galvanised Connector Plate Nails are used in each leg of the Heavy Duty Joist Strap.

DESIGN CAPACITY

Table 23: VUETRADE Heavy Duty Joist Straps design capacity data

Load Directions	Design Capacity for Timber Joint Groups, kN					
	J3	J4	J5	JD3	JD4	JD5
Dead Load, 1.35G	1.7	1.2	0.9	2.5	1.8	1.4
Dead & Floor Live Loads 1.2G+1.5Qf	2.1	1.4	1.1	3.0	2.2	1.8
Dead & Roof Live Loads 1.2G+1.5Qr	2.3	1.6	1.2	3.4	2.4	2.0
Wind Uplift	3.4	2.4	1.8	5.0	3.6	2.9

NOTES:

1. Design capacities in Table 23 are based on installing 5 x VUETRADE 30mm x 2.8mm Ø Galvanised Connector Plate Nails on each end of the Heavy Duty Joist Strap only.
2. For added strength, additional nails may be installed into pre-bored holes located at the lower leg of the Heavy Duty Joist Strap. NEVER punch nails through sheet metal as it may result in weaker, non-compliant connections.
3. Modification factors k1 for different load cases are adopted from AS1720.1-2010.
4. Design capacities in Table 23 are based on Category 1 joints where it is applicable for failures that would be unlikely to affect an area of greater than 25m2. For Category 2 and Category 3 joints, design capacities from the table are multiplied by 0.941 and 0.882 respectively.
5. Design capacities can be doubled by utilising VUETRADE Heavy Duty Joist Straps as a pair (left and right hand) for a single joint.

VUETRADE for the builder

GALVANISED CYCLONE STRAPS

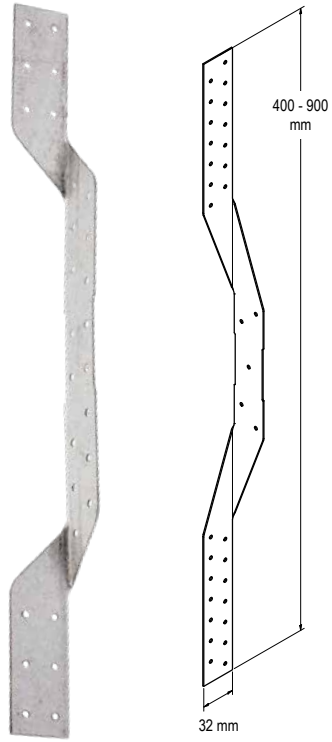

APPLICATION

VUETRADE Cyclone Straps are used for tying down purlins and trusses to wall frames in cyclonic & high wind areas.

SPECIFICATION

VUETRADE Cyclone Straps are manufactured from G300 Z275 galvanised steel in 1.0mm thickness (TCT).

FASTENERS

Nails: Use only VUETRADE 30mm x 2.8mm Ø Galvanised Connector Plate Nails

SIZES

Product Code	Length	Box Qty
VTCS400	400mm	100
VTCS600	600mm	100
VTCS900	900mm	100

INSTALLATION AND NAILING SCHEDULE

Use recommended number of nails in Table 24 to achieve its respective design capacities.

FACE FIXED

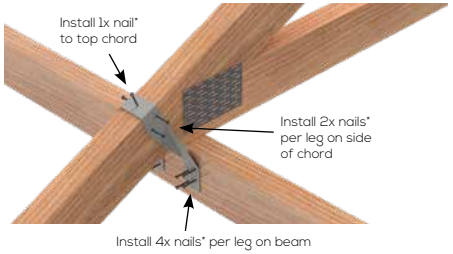

WRAP UNDER FIXING

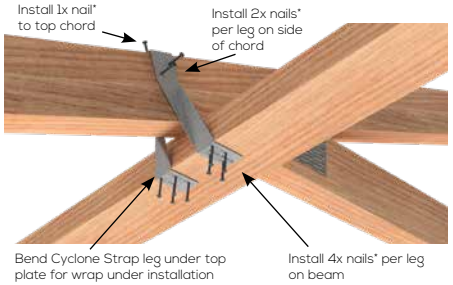

WRAP UNDER & OVER FIXING

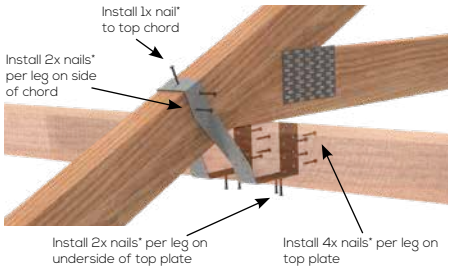

* Use only VUETRADE 30mm x 2.8mm Ø Galvanised Connector Plate Nails for fastening Cyclone Straps.

DESIGN CAPACITY DATA

Table 24: Cyclone Strap design capacities for Face Fixed Installation

Product length	Nails per leg	Design Capacity for Timber Joint Groups, kN					
		J3	J4	J5	JD3	JD4	JD5
All lengths	**2**	3.1	2.2	1.7	4.3	3.1	2.5
All lengths	**4**	6.2	4.4	3.3	8.7	6.2	5.1
600mm & 900mm	**6**	8.2	5.8	4.4	9.5	8.6	7.1
600mm & 900mm	**8**	9.5	7.3	5.5	9.5	9.5	9.3
600mm & 900mm	**14**	9.5	9.5	9.0	9.5	9.5	9.5

Table 25: Cyclone Strap design capacities for Wrap Under and Wrap Under & Over Installations

Product length	Nails per leg	Design Capacity for Timber Joint Groups, kN					
		J3	J4	J5	JD3	JD4	JD5
All lengths	**6 (see note 5)**	9.5	9.5	9.5	9.5	9.5	9.5

NOTE:

1. Values in Table 24 and Table 25 use VUETRADE 30mm x 2.8mm Ø Galvanised Connector Plate Nails only. Values that exceed 9.5kN are limited to the strength of G300 Z275 galvanised steel.
2. Modification factors k1 for different load cases are adopted from AS1720.1-2010.
3. Design capacities in the above tables are based on Category 1 joints where it is applicable for failures that would be unlikely to affect an area of greater than 25m2. For Category 2 and Category 3 joints, design capacities from the table are multiplied by 0.941 and 0.882 respectively.
4. NEVER punch nails through sheet metal as it results in weaker, non-compliant connections.
5. For Cyclonic Strap length 400mm only 4 nails are used fixed to the underside of the top plate. Wrap under & over is not applicable for 400mm straps.

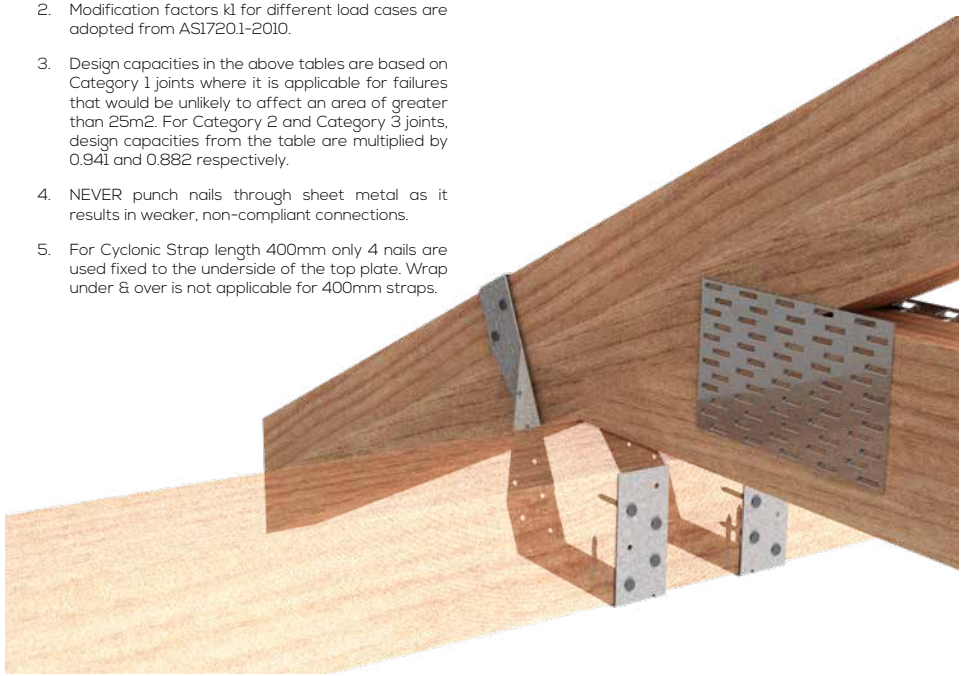

VUETRADE for the builder

GALVANISED SINGLE SIDED STUD TIES

G

VTST LH

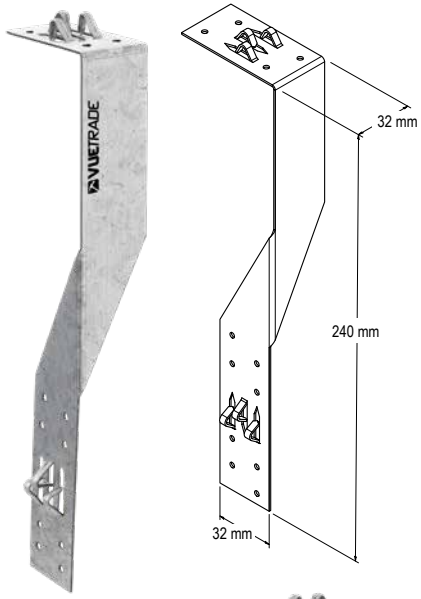

VTST RH

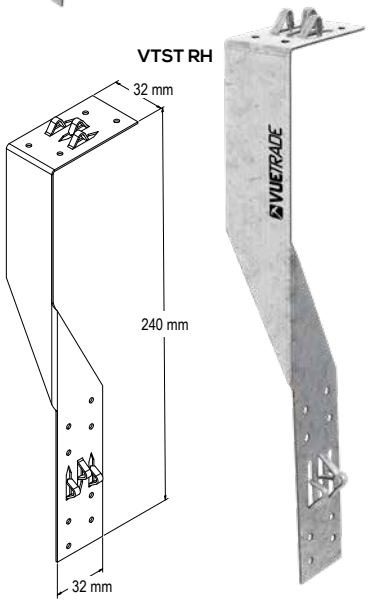

APPLICATION

VUETRADE Single Sided Stud Ties are used for fastening top and bottom wall plates to studs in high wind areas.

SPECIFICATION

VUETRADE Single Sided Stud Ties are manufactured using G300 Z275 Galvanised Steel.

FASTENERS

Nails: Use only VUETRADE 30mm x 2.8mm Ø Galvanised Connector Plate Nails

SIZES

Product Code	Nominal Size (mm)	Box Qty
VTSTLH	240 x 60 x 32	75
VTSTRH	240 x 60 x 32	75

INSTALLATION GUIDE

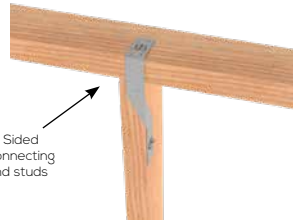

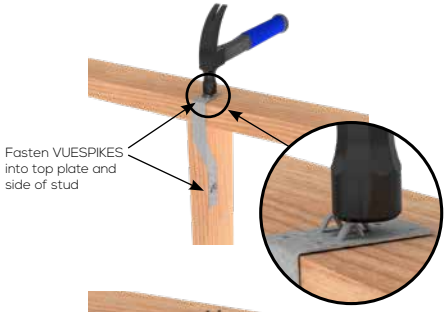

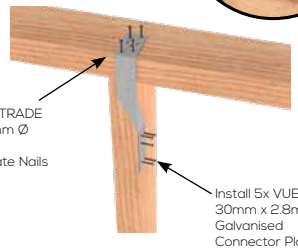

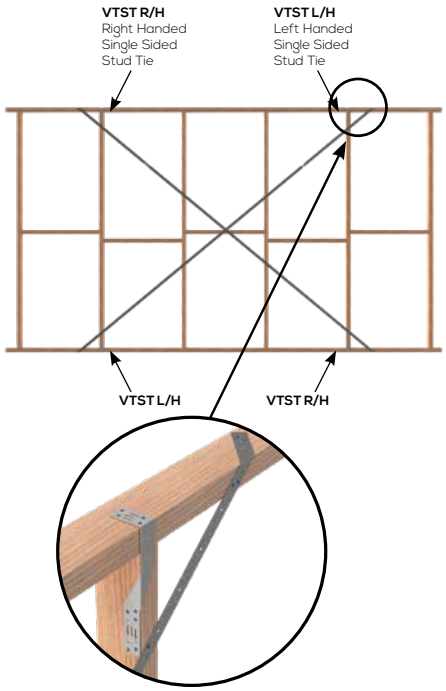

NOTES:

1. Use only VUETRADE 30mm x 2.8mm Ø Galvanised Connector Plate Nails when installing Single Sided Stud Ties. Install only through pre-bored holes, do not drive nails through Stud Ties sheet metal as it will result in a weaker and non-compliant joint.
2. Fixing of Single Sided Stud Ties shall be on the same face as the bracing and/or same face of truss fixing.

VUETRADE Single Sided Stud Ties can be used as an alternative fixing method for wall bracing in accordance with AS1684. Refer to AS1684.2:2021 and AS1684.3:2021 for more bracing details.

DESIGN CAPACITY

Table 26: Design capacity data for Single Sided Stud Ties

Load Case	Design Capacity for Timber Joint Groups, kN					
	J3	J4	J5	JD3	JD4	JD5
Wind Uplift	3.4	2.4	1.8	5.0	3.6	2.9

NOTES:

1. Design capacities in Table 26 are based on installation of Single Sided Stud Ties with 5 nails on side stud and 4 nails on top plates using VUETRADE 30mm x 2.8mm Ø Galvanised Connector Plate Nails only.
2. Modification factors k1 for different load cases are adopted from AS1720.1-2010.
3. Design capacities in Table 26 are based on Category 1 joints where it is applicable for failures that would be unlikely to affect an area of greater than 25m2. For Category 2 and Category 3 joints, design capacities from the table are multiplied by 0.941 and 0.882 respectively.
4. Design capacity of Single Sided Stud Ties may be increased with more nails installed through pre-bored holes. Do not punch through sheet material as it will result in a weaker and non-compliant connection.

VUETRADE for the builder

GALVANISED STUD TIES

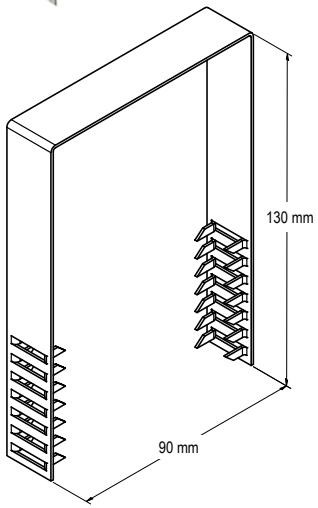

APPLICATION

VUETRADE Stud Ties are used for fastening top and bottom wall plates to studs in high wind areas.

SPECIFICATION

VUETRADE Stud Ties are manufactured using G300 Z275 Galvanised Steel.

FASTENERS

Use only built-in VUESPIKES for ease of installation.

SIZE

Product Code	Nominal Size (mm)	Box Qty
VTST4U90	130 x 90	50

DESIGN CAPACITY

Table 27: Design capacity data for Stud Ties

Load Direction	Design Capacity
Wind Uplift	3.51 kN

NOTES:

1. Design Capacities in Table 27 are strictly for wind uplifts only and obtained under test conditions.
2. Design Capacity obtained in Table 27 is for JD4 timber joint group.
3. Only VUESPIKES are installed to achieve the design capacity. No additional nails are used.

Bellevue Group Australasia are continuously working to develop and improve our product range.
We reserve the right to change specifications, etc. without notice. For our full disclaimer, refer to page 2.

GALVANISED STRAP NAILS

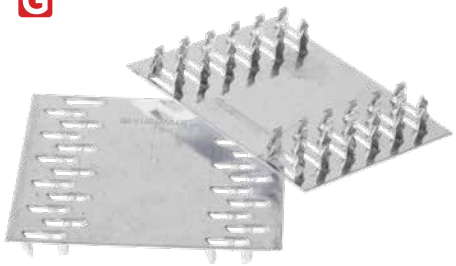

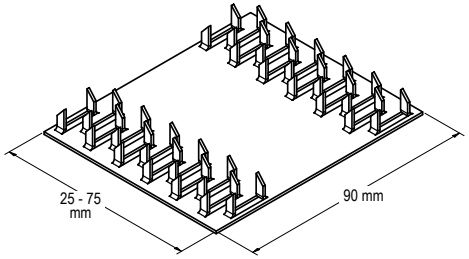

APPLICATION

VUETRADE Strap Nails designed for quick joining of timber frames by using a hammer.

SPECIFICATION

VUETRADE Stud Ties are manufactured using G300 Z275 Galvanised Steel.

FASTENERS

Use only built-in VUESPIKES for ease of installation.

SIZES

Product Code	Size (mm)	Box Qty
VTSN2590	25 x 90mm	100
VTSN5090	50 x 90mm	100
VTSN7590	75 x 90mm	100

DESIGN CAPACITY

Table 28: Design capacity data for Strap Nails for Timber Joint Group JD4

Strap Nail Size	Maximum Load (kN) for one Strap Nail
25 x 90mm	1.3
50 x 90mm	2.7
75 x 90mm	4.1

NOTE:

Design capacities in Table 28 are obtained under test conditions.

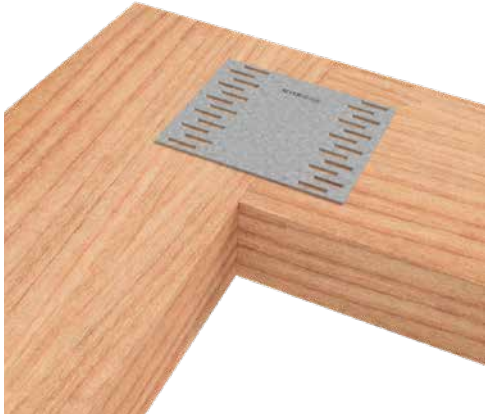

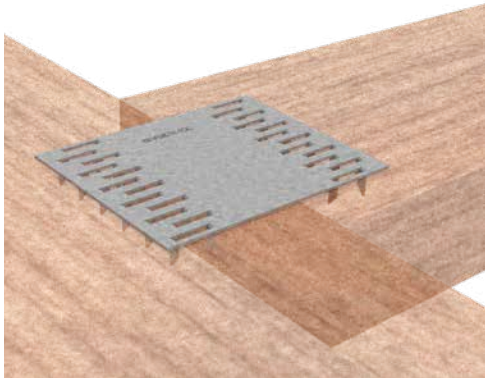

VUETRADE Timber Connectors is a division of **Bellevue Group Australasia**
technical@bellevuegroup.com.au **1300 850 520** www.vuetrade.com

VUETRADE for the builder

GALVANISED INSUL FIX FASTENERS

G

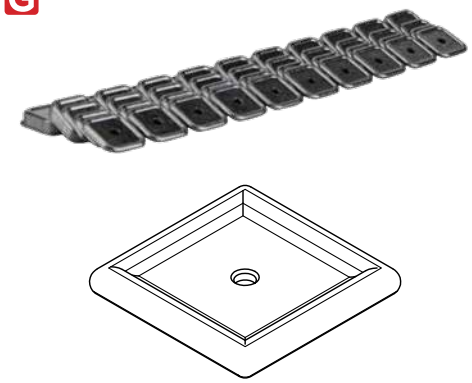

APPLICATION

VUETRADE Insul Fix Fasteners are designed to be tear resistant with a wide size and rounded edges. These features greatly reduce the tendency of the foil to tear in windy conditions.

SPECIFICATION

VUETRADE Insul Fix Fasteners are manufactured using G300 Z275 zinc galvanised steel. They come in an easily separable strip of 10.

FASTENERS

Nails: Use only VUETRADE 30mm x 2.8mm Ø Galvanised Connector Plate Nails

SIZES

Product Code	Box Qty
F81006	500

GALVANISED FOIL TACKS

G

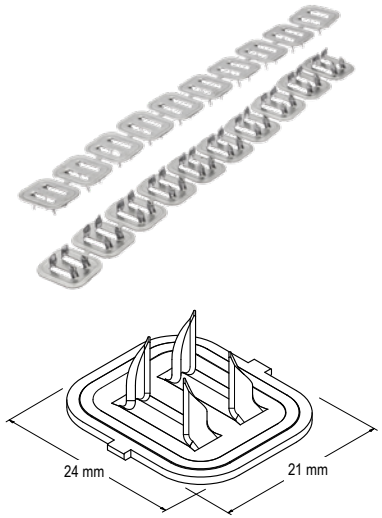

APPLICATION

VUETRADE Foil Tacks are designed to be tear resistant with a wide size and rounded edges. These features greatly reduce the tendency of the foil to tear in windy conditions. The twisted nail profile allows excellent penetration and holding power in all timber types and specifications.

SPECIFICATION

VUETRADE Foil Tacks are manufactured using G300 Z275 zinc galvanised steel with a thickness of 0.8mm. They come in an easily separable strip of 10.

SIZES

Product Code	Box Qty	Pallet Qty
VTFT	500	240

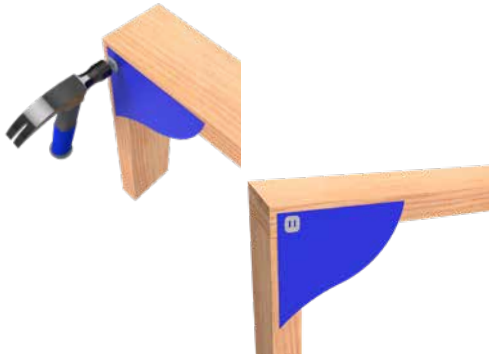

Bellevue Group Australasia are continuously working to develop and improve our product range.
We reserve the right to change specifications, etc. without notice. For our full disclaimer, refer to page 2.

VUETRADE for the builder

GALVANISED CONNECTOR PLATE NAILS

G

APPLICATION

VUETRADE Galvanised Connector Plate Nails are specially engineered and designed for VUETRADE Timber Connector Products to achieve the specified design capacity in their respective technical data sheets.

SPECIFICATION

VUETRADE Galvanised Connector Plate Nails are manufactured using cold drawn, low carbon steel which is then hot dipped galvanised for corrosion protection.

VUETRADE Galvanised Connector Plate Nails are suitable for all framing purposes where nail fixing is required as required by the framing code AS1684.2:2021 / AS1684.3:2021 / AS1684.4-2010.

PRODUCT RANGE

Product Code	Size (mm)	Weight	Approx. Number of Nails
VTCPNG3028500	30 x 2.8 Ø	500 g	260
VTCPNG30282	30 x 2.8 Ø	2 kg	1040
VTCPNG30285	30 x 2.8 Ø	5 kg	2600

FIXING DETAILS

VUETRADE Galvanised Connector Plate Nails can be used with all VUETRADE timber connector products where 30mm x 2.8mm Ø galvanised nail fixings are required.

Refer to individual product's Technical Data Sheet for specific fixing details.

Usage of Galvanised Connector Plate Nails with stainless steel VUETRADE products may result in bimetallic corrosion which will reduce their design capacities.

VUETRADE Timber Connectors is a division of **Bellevue Group Australasia**
technical@bellevuegroup.com.au **1300 850 520** www.vuetrade.com

VUETRADE for the builder

GALVANISED TAP IN PLATES

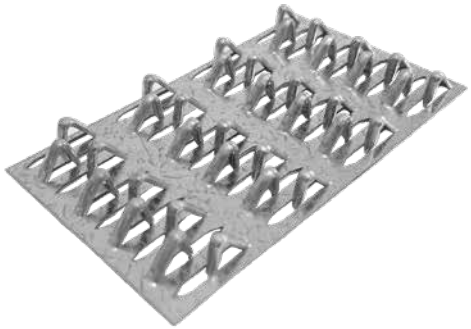

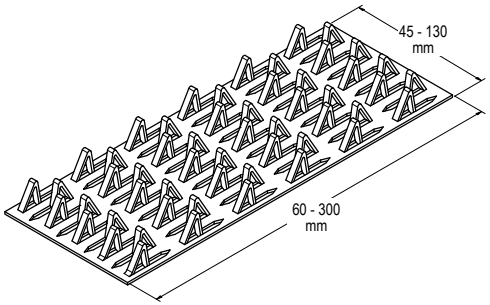

APPLICATION

VUETRADE Galvanised Tap In Plates provide strong and secure joints in various timber connection applications, such as joining various timber wall frames and top plates together, manufacturing trusses and repairing timber ends.

SPECIFICATION

VUETRADE Galvanised Tap In Plates are manufactured in 1.2mm G250 Z275 galvanised steel to wide range of sizes to suit different sizes of timber, with precisely bent 'teeth' as a means of timber fastening.

SIZES

Product Code	Size (mm)	Box Qty	No. of teeth per plate
VTIP45120	45 x 120	100	24
VTIP45180	45 x 180	67	36
VTIP45240	45 x 240	50	48
VTIP7060	70 x 60	100	18
VTIP70120	70 x 120	75	36
VTIP70180	70 x 180	50	54
VTIP70240	70 x 240	38	72
VTIP70300	70 x 300	30	90
VTIP90120	90 x 120	50	48
VTIP90180	90 x 180	34	72
VTIP90240	90 x 240	25	96
VTIP90300	90 x 300	20	120
VTIP130120	130 x 120	30	72
VTIP130180	130 x 180	20	108

INSTALLATION GUIDE

Install VUETRADE Tap In Plate by driving each of the teeth on the Galvanised Tap In Plate into the both timber joint members using a hammer.

For application of butt jointing, ensure that the Tap In Plate are installed with equal length in the timber member (symmetrically) and fix one plate on each face of the timber member.

Hydraulic press may also be used on Tap In Plate for roof trusses manufacturing.

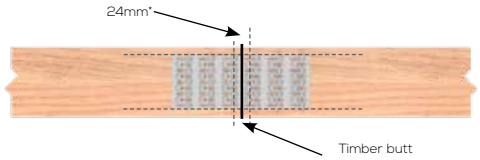

* No nails should be driven within 12mm from timber butt end or within 6mm to the timber edge to reduce risk of timber splitting.

DESIGN CAPACITY DATA

The method of obtaining design capacities for VUETRADE Tap In Plates was derived based on the test method established from Australian Standard AS1649-2001 - *Timber - Methods of test for mechanical fasteners and connectors - Basic working loads and characteristic strengths.*

The loads of standard timber joint groups shown in this document are defined based on the Australian Standard AS1720.1-2010 - *Timber structures, Part 1: Design methods.* Refer to VUETRADE's Timber Properties Technical Data for the classification of joint groups for various timber species.

Table 29: Design capacity data for Tap In Plates

Design Load Capacity (N/tooth) for Timber Joint Group: JD4		
Load Direction	**Perpendicular**	**Parallel**
Dead Load	125	127
Dead Load + Roof Live Load	169	172
Dead Load + Wind Load	250	255

NOTES:

1. The duration factor k1 used to derive the values above are 0.57 for dead loads, 0.77 for combination of dead load and roof live load and 1.14 for combination of dead load and wind load. Modification factors k1 for different load cases are adopted from AS1720.1-2010.
2. Design capacities in the tables are based on Category 1 joints where it is applicable for failures that would be unlikely to affect an area of greater than 25m2. For Category 2 and Category 3 joints, design capacities from the table are multiplied by 0.941 and 0.882 respectively.
3. The design of timber joints as specified in the Australian Standard AS1649-2001 states that teeth driven 12mm to the butt end and 6mm to the timber edges are ineffective (refer to illustration on previous page). VUETRADE Tap In Plates teeth are manufactured 30mm apart which means that all teeth deliver effective loading.

VUETRADE for the builder

GALVANISED BEARER PLATES

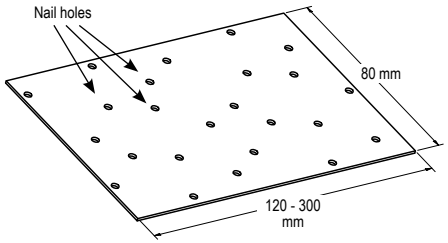

APPLICATION

VUETRADE Bearer Plates are manufactured as a flat steel plate which are then fixed with flat head nails or screws. The plates are suitable for a range of construction applications such as:

- Joining timber by butting members together (for spliced joint connection Bearer Plates must be used in pairs);
- An alternative for heavy duty connection where a tap in plate will not offer adequate strength;
- Framework repair;
- Member or joint reinforcement works.

SPECIFICATION

VUETRADE Bearer Plates are manufactured in 1.0mm G300 Z275 galvanised steel in various lengths.

FASTENERS

Nails: Use only VUETRADE 30mm x 2.8mm Ø Galvanised Connector Plate Nails

SIZES

Product Code	Size (mm)	Box Qty	Number of holes per plate
VTBP80120	80 x 120	100	24
VTBP80180	80 x 180	100	36
VTBP80240	80 x 240	50	48
VTBP80300	80 x 300	50	60

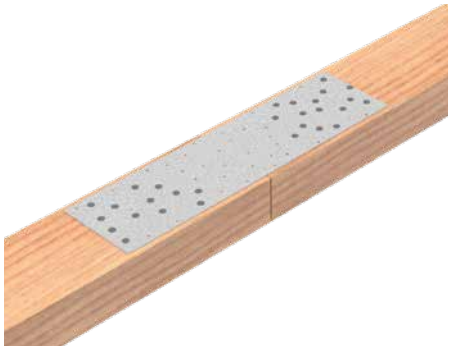

INSTALLATION GUIDE

1. Install VUETRADE Bearer Plate to joint by driving VUETRADE 30mm x 2.8mm Ø Galvanised Connector Plate Nails with a hammer.
2. Ensure that nails are driven in all appropriate nail holes to ensure product compliancy and maximum load obtained.
3. Ensure that no nails driven within 56mm of the timber butt end and 14mm to the timber edge.
4. For application of butt jointing, ensure that the Bearer Plates are installed with equal length in the timber member (symmetrically) and fix one plate on each face of the timber member.

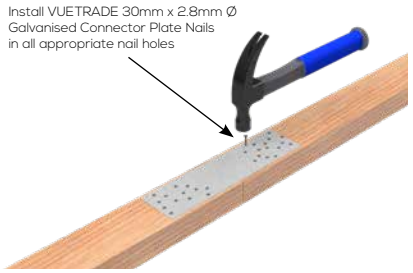

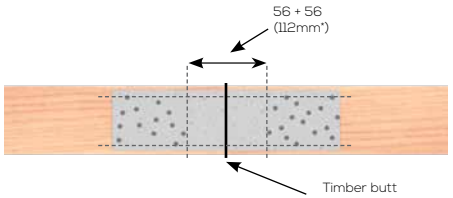

* No nails should be driven within 56mm from timber butt end or within 14mm to the timber edge to reduce risk of timber splitting.

DESIGN CAPACITY DATA

Table 30: Design capacities for a pair of Bearer Plates of 80mm width at various lengths

Length	Type of Load	Design Capacity for Timber Joint Groups, kN					
		J3	J4	J5	JD3	JD4	JD5
120mm	Dead Load	See note 4(c)					
	Dead Load + Roof Live Load						
	Dead Load + Wind Load						
180mm	Dead Load	4.6	3.3	2.5	6.5	4.6	3.8
	Dead Load + Roof Live Load	6.3	4.4	3.3	8.8	6.3	5.1
	Dead Load + Wind Load	9.3	6.6	5.0	13	9.3	7.6
240mm	Dead Load	9.8	6.9	5.2	13.7	9.8	8.1
	Dead Load + Roof Live Load	13.3	9.4	7.1	18.6	13.3	10.9
	Dead Load + Wind Load	19.7	13.9	10.5	27.5	19.7	16.1
300mm	Dead Load	12.4	8.8	6.6	17.3	12.4	10.2
	Dead Load + Roof Live Load	16.7	11.8	8.9	23.4	16.7	13.7
	Dead Load + Wind Load	24.8	17.5	13.2	34.6	24.8	20.3

NOTES:

1. Design capacities in Table 30 are for a pair of plates.
2. The duration factor k1 used to derive the values above are 0.57 for dead loads, 0.77 for combination of dead load and roof live load and 1.14 for combination of dead load and wind load. Modification factors k1 for different load cases are adopted from AS1720.1-2010.
3. Design capacities in the table are based on Category 1 joints where it is applicable for failures that would be unlikely to affect an area of greater than 25m2. For Category 2 and Category 3 joints, design capacities from the table are multiplied by 0.941 and 0.882 respectively.
4. Capacities obtained above are based on the following criteria:

   a. Nail holes within 56mm from the timber end are not fixed, otherwise all holes must be fixed with VUETRADE 30mm x 2.8mm Ø Galvanised Connector Plate Nails.

   b. The timber end / edge distance of 56mm / 14mm according to AS1720.1-2010 shall not have any nail fixed to the timber.

   c. 80 x 120mm Bearer Plates are not recommended to be used for splice joint connection as it does not meet AS1720.1-2010 end-distance requirements of no nails shall be installed 56mm from the timber end.

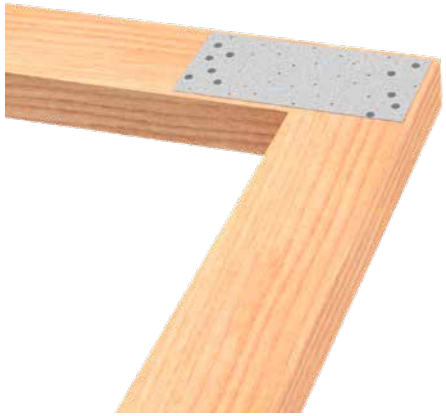

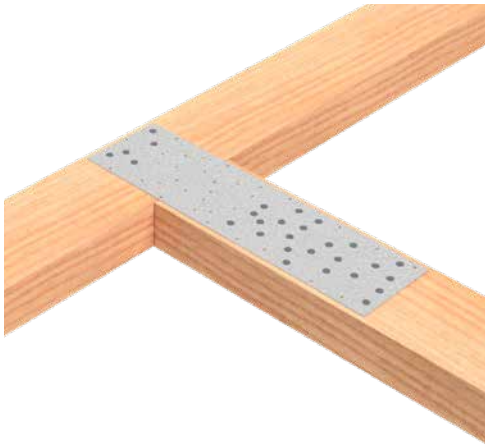

GALVANISED

VUETRADE for the builder

GALVANISED PERGOLA ANGLES

G

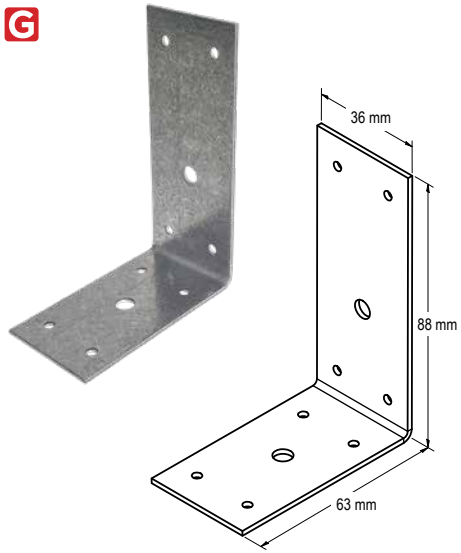

APPLICATION

VUETRADE Pergola Angles are galvanised, multi-purpose building brackets ideal for connecting pergola rafters to beams.

SPECIFICATION

VUETRADE Galvanised Pergola Angles are manufactured using G300 Z275 galvanised steel in 1.6mm thickness.

FASTENERS

Nails: 8x VUETRADE 30mm x 2.8mm Ø Galvanised Connector Plate Nails, **AND:**

Screw: 1x appropriate Type 17 12g x 65mm galvanised screw

SIZES

Product Code	Size (mm)	Box Qty
VTPA36	88 x 63 x 36 x 1.6	200

INSTALLATION GUIDE

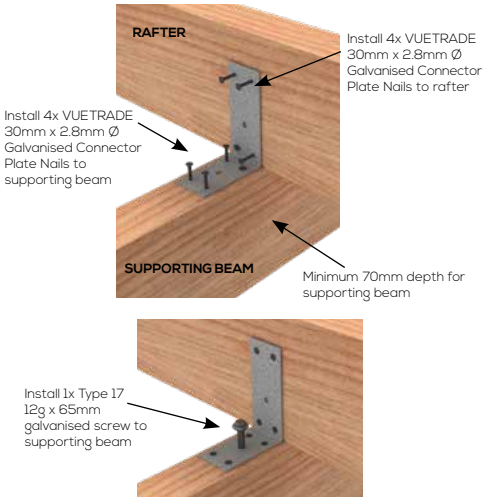

NOTES:

1. Ensure that support beam to have a minimum section size of 70mm.
2. Use only VUETRADE 30mm x 2.8mm Ø Galvanised Connector Plate Nails and galvanised screws, usage of other steel materials nails and bolts with galvanised Pergola Angles may lead to bimetallic corrosion.
3. Install nail through pre-bored nail/screw holes provided, do not punch through sheet material as it may result in a weaker, non-compliant product.

DESIGN CAPACITY DATA

Table 31: Design capacity data of Pergola Angle on different joint group

Load Case	Design Capacity for Timber Joint Groups, kN					
	J3	J4	J5	JD3	JD4	JD5
Wind Uplift	3.1	2.2	1.7	4.3	3.1	2.5

NOTE:

1. Design capacities in Table 31 are based on installation of Pergola Angles with 4x VUETRADE 30mm x 2.8mm Ø Galvanised Connector Plate Nails on both flanges (total of 8x nails) and 1x Type 17 12g x 65mm screw.
2. Modification factors k1 for different load cases are adopted from AS1720.1-2010.
3. Design capacities in the Table 31 are based on Category 1 joints where it is applicable for failures that would be unlikely to affect an area of greater than 25m2. For Category 2 and Category 3 joints, design capacities from the table are multiplied by 0.941 and 0.882 respectively.

Bellevue Group Australasia are continuously working to develop and improve our product range.
We reserve the right to change specifications, etc. without notice. For our full disclaimer, refer to page 2.

GALVANISED INTERNAL WALL BRACKETS

G

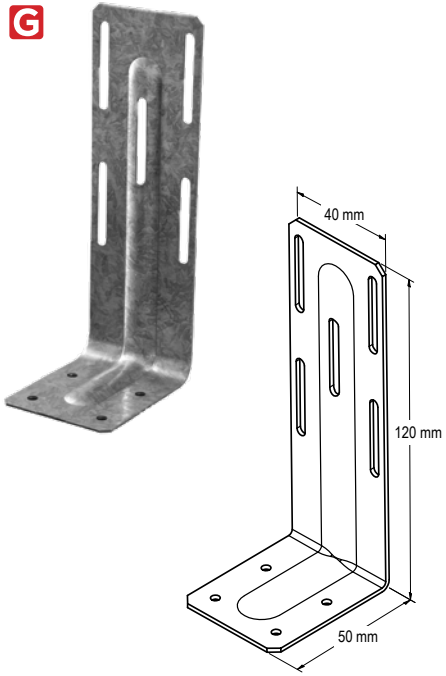

APPLICATION

VUETRADE Internal Wall Bracket is used for lateral movement restraint of wall top plates when installed to internal walls. Elongated nail hole patterns specifically designed to allow vertical movement without applying additional loads to walls.

SPECIFICATION

VUETRADE Internal Wall Bracket is manufactured with 1.0mm thick G300 Z275 steel.

FASTENERS

Nails: Use only VUETRADE 30mm x 2.8mm Ø Galvanised Connector Plate Nails

SIZES

Product Code	Nominal Size (mm)	Box Qty
VTPA47	120 x 50 x 40 x 1	100

INSTALLATION GUIDE

As required by AS1684 Clause 6.2.5.2, non-loadbearing walls shall have a gap of minimum 10mm between bottom chord/ ceiling battens and non-loadbearing walls. VUETRADE Internal Wall Bracket satisfy the installation requirement of AS1684 cl 6.2.5.2 of a slotted bracket to allow vertical movement of truss.

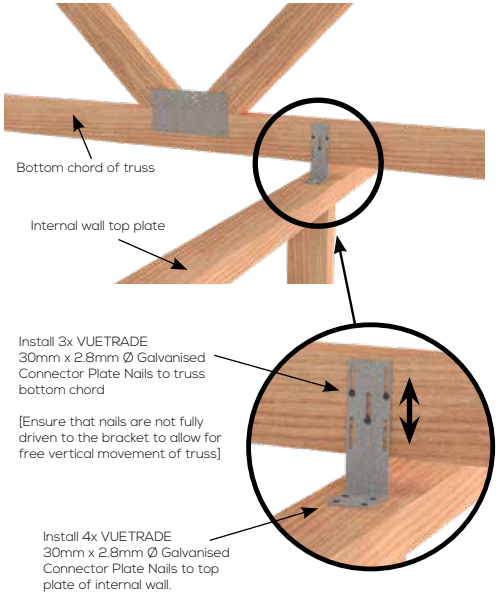

NOTES:

1. Ensure that 10mm gap is provided below bottom chord / batten as required in AS1684.
2. Do not drive nails on vertical face fully home to allow for free vertical movement of bottom chord
3. Extra nailing slots are provided where additional nails are required.
4. Internal Wall Bracket shall be fixed at 1800mm centres as recommended in AS1684 cl 6.2.5.2.

GALVANISED

VUETRADE Timber Connectors is a division of **Bellevue Group Australasia**
technical@bellevuegroup.com.au **1300 850 520** www.vuetrade.com

VUETRADE for the builder

GALVANISED HOLD DOWN BRACKETS

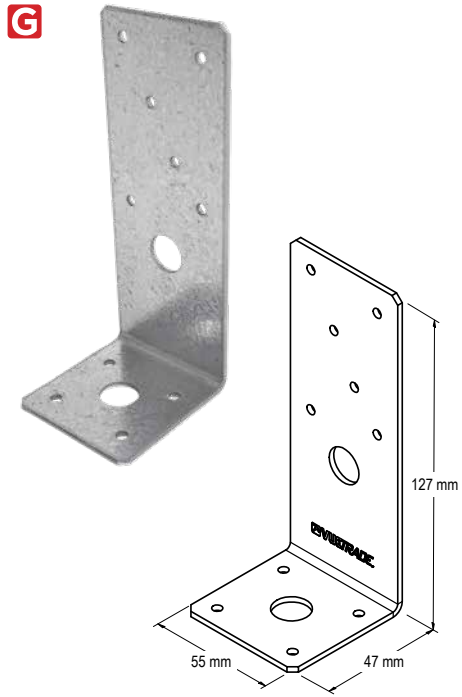

APPLICATION

VUETRADE Hold Down Bracket is a heavy duty multi-purpose building bracket that provides tie down resistance, often used in the construction of wall studs and roof trusses.

SPECIFICATION

VUETRADE Hold Down Brackets are manufactured in 2mm G300 Z275 galvanised steel.

FASTENERS

Nails: Use only VUETRADE 30mm x 2.8mm Ø Galvanised Connector Plate Nails, **AND:**

Bolts: 1x M12 galvanised bolt / rod.

M12 bolts must be used to tie down the bracket to the supporting plate.

PRODUCT SIZES

Product Code	Size (mm)	Thickness (mm)	Box Qty
VTHDB	127 x 55 x 47	2.0	75

INSTALLATION AND NAILING SCHEDULE

1. Position and drill a 13mm hole through the support timber for M12 bolt.
2. Install suitable M12 bolts onto support timber.
3. Install 6x VUETRADE 30mm x 2.8mm Ø Galvanised Connector Plate Nails into stud / rafter.
4. A square washer may be used with the M12 bolt.
5. Install 4x VUETRADE 30mm x 2.8mm Ø Galvanised Connector Plate Nails into bottom member.

BOTTOM PLATE FIXING

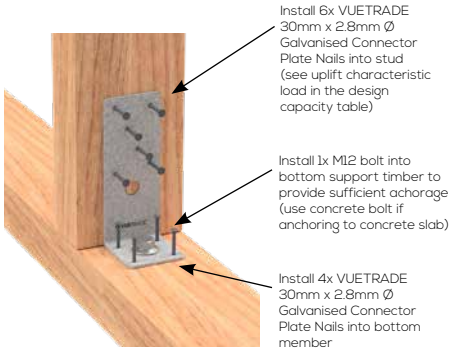

TRUSS / RAFTER TO TOP PLATE FIXING

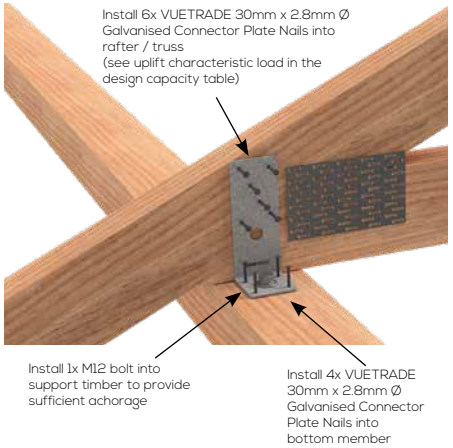

VUETRADE for the builder
Timber Connectors
Compliance Data

DESIGN CAPACITY DATA

Table 32: Hold Down Bracket Design Capacities

Load Directions	Design Capacity, Ndj (kN) for different timber species group					
	J3	J4	J5	JD3	JD4	JD5
Wind Uplift	4.6	3.3	2.5	6.5	4.6	3.8

NOTES:

1. Design capacities in Table 32 applies to VUETRADE Hold Down Brackets, where a minimum of 6 VUETRADE 30mm x 2.8mm Ø Galvanised Connector Plate Nails are installed in the vertical member of the connection and a M12 bolt for the horizontal member for maximum tie down capacity.
2. The design capacities are calculated based on the assumption that there is sufficient anchorage on the supporting member to resist wind uplift.
3. Design capacities in Table 32 are based on Category 1 joints where it is applicable for failures that would be unlikely to affect an area of greater than 25m2. For Category 2 and Category 3 joints, design capacities from the table are multiplied by 0.941 and 0.882 respectively.
4. A pair of Hold Down Brackets may be used to double the design capacity tabulated above.

VUETRADE for the builder

GALVANISED FULL STIRRUP POST SUPPORTS

G

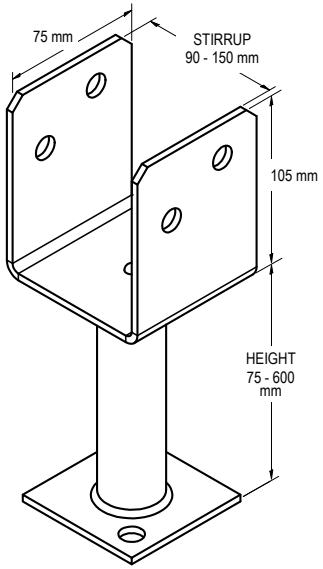

APPLICATION

Full Stirrup Post Supports are brackets ideal for holding timber posts, installed by bolting onto or setting into concrete.

SPECIFICATION

VUETRADE Galvanised Steel Full Stirrup Post Supports are manufactured using G300 steel and corrosion protected with Hot Dipped Galvanised.

FASTENERS

Saddle: 2x Zinc-Nickel Coated VUEBOLT or appropriate M12 bolts with hex nuts

Base: 2x M12 concrete bolts or equivalent

SIZES

Full Stirrup Post Support stirrup sizes range from 90 to 150mm, and leg sizes from 75 to 600mm. Common sizes include:

Product Code	Stirrup Size (mm)	Height (mm)	Box Qty
VPS13090	90	130	10
VPS130100	100	130	10
VPS130115	115	130	10
VPS130125	125	130	10
VPS300135	135	300	10
VPS450150	150	450	10
VPS600115	115	600	10

* For extensive listing of standard and custom sized Full Stirrups, refer to the VUETRADE Full Stirrup Post Support webpage.

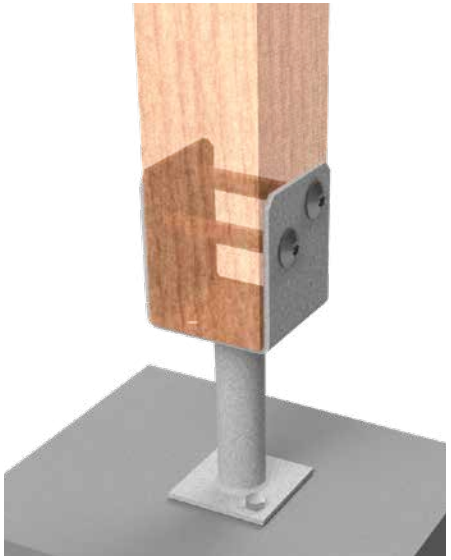

Bellevue Group Australasia are continuously working to develop and improve our product range.
We reserve the right to change specifications, etc. without notice. For our full disclaimer, refer to page 2.

VUETRADE for the builder

INSTALLATION GUIDE AND BOLT FIXING SCHEDULE

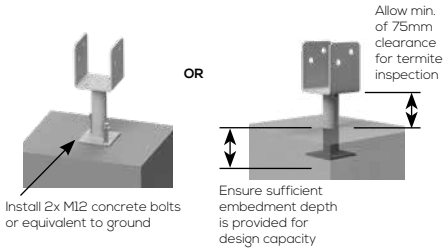

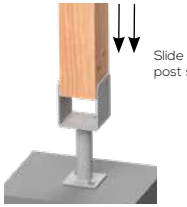

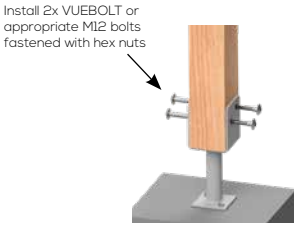

NOTES:

1. Embedment depth of VUETRADE Post Support should be determined and calculated by a Structural Engineer in order to achieve the reported design load. This usually depends on the type of concrete used, aggregate ratio etc.
2. 75mm clearance must be provided to conform to the requirements set out by AS3660.1:2014 - *Termite management, Part 1: New building work.*

DESIGN CAPACITY DATA

Table 33: Full Stirrup Post Support design capacities

Load Case	Design Capacity, Ndj (kN)					
	J3	J4	J5	JD3	JD4	JD5
Uplift capacity	12.7	10.0	8.7	15.8	12.7	11.0

NOTES:

1. Design capacity in Table 33 applies to VUETRADE Post Supports where 2x M12 bolts are installed and tightly fastened with nuts.
2. Timber posts must have minimum dimensions of 90mm by 90mm section and shall be installed flat to the base of the post support.
3. Design capacities for post supports bolted or cast into concrete assumed that there is sufficient anchorage in the concrete to resist the pull-out force imposed by wind loading.
4. Design capacities in the above table are for wind uplift (vertical force direction) only and are obtained under strict in-house test conditions defined by AS1649-2001 – *Timber - Methods of test for mechanical fasteners and connectors* & uplift capacity requirements outlined in AS1720.1-2010 – *Timber structures, Part 1: Design methods.*
5. VUETRADE Post Supports should only be used to resist wind uplift / dead load as specified in the TDS and should not be assumed to provide lateral stability. Sufficient bracing should be provided and approved by a structural engineer for lateral stability.
6. Design capacity of post support may be limited by the withdrawal tensile capacity of concrete bolts used to fasten post support to concrete ground. Ensure that suitable concrete bolts are used for above design capacities to be valid.

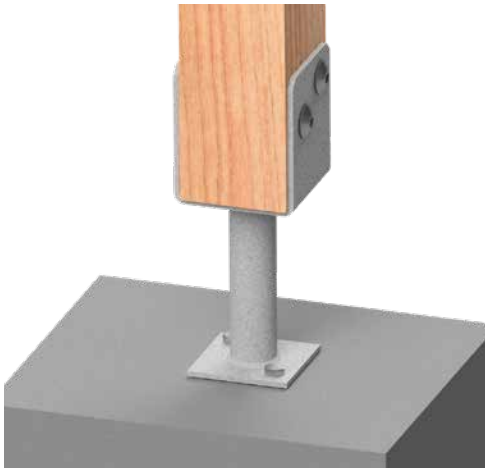

VUETRADE for the builder

GALVANISED HALF STIRRUP POST SUPPORTS

G

BOLTED TO CONCRETE

CAST INTO CONCRETE

APPLICATION

Half Stirrup Post Supports are brackets ideal for fixing timber posts to a base, especially where the post can only be accessed from one side for bolting.

SPECIFICATION

VUETRADE Galvanised Half Stirrup Post Supports are manufactured in G300 steel and corrosion protected with Hot-Dipped Galvanised.

FASTENERS

Saddle: 2x Zinc-Nickel Coated VUEBOLT or appropriate M12 bolts with hex nuts

Base: 2x M12 concrete bolts or equivalent

SIZES

Product Code	Height (mm)	Box Qty
VHSPS75	75	10
VHSPS125	125	10
VHSPS200	200	10
VHSPS250	250	10
VHSPS300	300	10

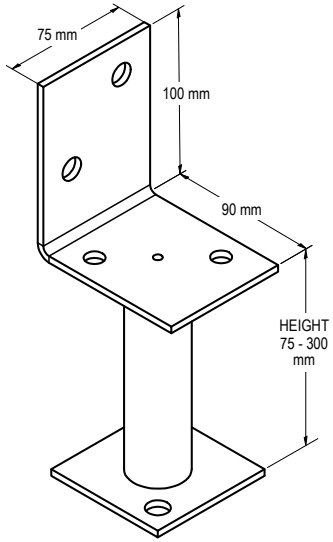

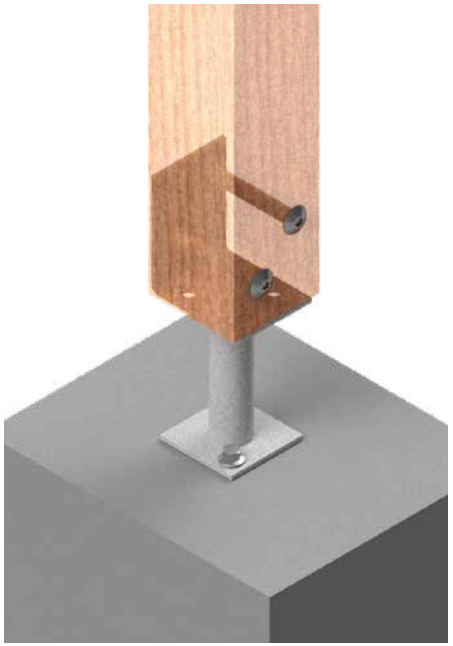

VUETRADE for the builder

Timber Connectors
Compliance Data

INSTALLATION GUIDE AND BOLT FIXING SCHEDULE

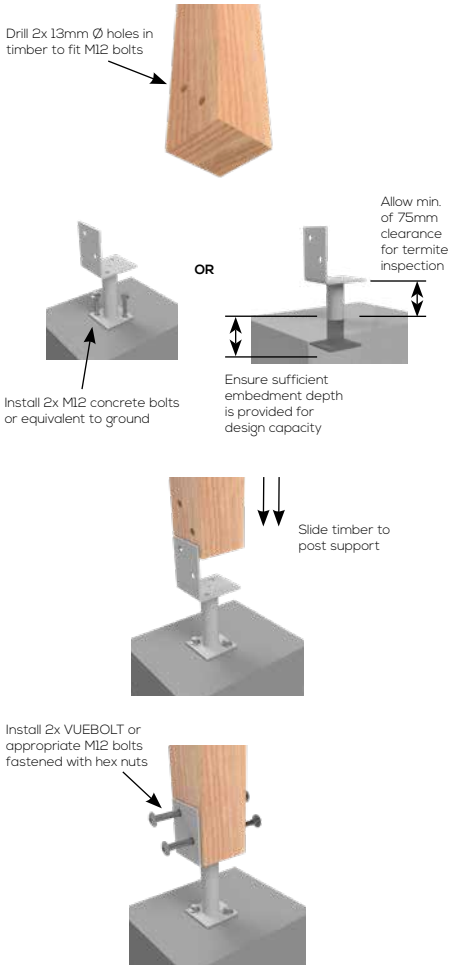

NOTES:

1. Embedment depth of VUETRADE Post Support should be determined and calculated by a Structural Engineer to achieve the reported design load. This usually depends on the type of concrete used, aggregate ratio etc.
2. 75mm clearance must be provided to conform to the requirements set out by AS3660.1:2014 - *Termite management, Part 1: New building work.*

DESIGN CAPACITY DATA

Table 34: Half Stirrup Post Support design capacities

Load Case	Design Capacity, Ndj (kN)					
	J3	J4	J5	JD3	JD4	JD5
Uplift capacity	6.3	5.0	4.3	7.9	6.3	5.5

NOTES:

1. Design capacity in Table 34 applies to VUETRADE Post Supports where 2x M12 bolts are installed and tightly fastened with nuts.
2. Timber posts must have minimum dimensions of 90mm by 90mm section and shall be installed flat to the base of the post support.
3. Design capacities for post supports bolted or cast into concrete are based on assumption that there is sufficient anchorage in the concrete to resist the pull-out force imposed by wind loading.
4. Design capacities in the above table are for wind uplift (vertical force direction) only and are obtained under strict in-house test conditions defined by AS1649-2001 – *Timber - Methods of test for mechanical fasteners and connectors* & uplift capacity requirements outlined in AS1720.1-2010 – *Timber structures, Part 1: Design methods.*
5. VUETRADE Post Supports should only be used to resist wind uplift / dead load as specified in the TDS and should not be assumed to provide lateral stability. Sufficient bracing should be provided and approved by a structural engineer for lateral stability.
6. Design capacity of post support may be limited by the withdrawal tensile capacity of concrete bolts used to fasten post support to concrete ground. Ensure that suitable concrete bolts are used for above design capacity to be valid.

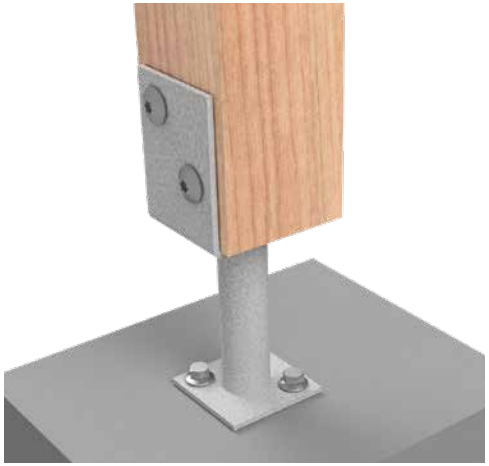

VUETRADE for the builder

GALVANISED CENTRE BLADE POST SUPPORTS

G

BOLTED TO CONCRETE

CAST INTO CONCRETE

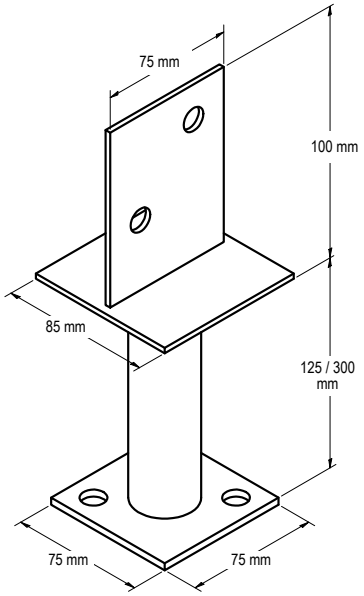

APPLICATION

Centre Blade Post Supports are brackets used for fixing timber posts to concrete or timber bases, with the 'hidden' blade providing a neat finish.

SPECIFICATION

VUETRADE Galvanised Centre Blade Post Supports are manufactured in G300 steel and corrosion protected with Hot Dipped Galvanised.

FASTENERS

Saddle: 2x Zinc-Nickel Coated VUEBOLT or appropriate M12 bolts with hex nuts

Base: 2x M12 concrete bolts or equivalent

SIZES

Product Code	Height (mm)	Box Qty
VBLPS125	125	10
VBLPS300	300	10

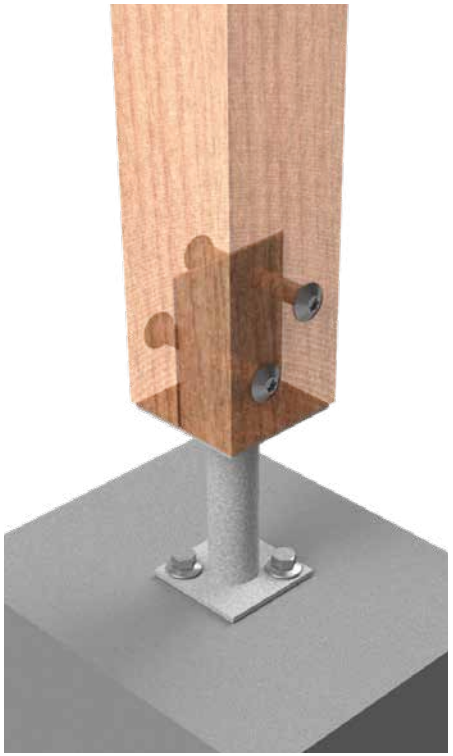

VUETRADE for the builder

INSTALLATION GUIDE AND BOLT FIXING SCHEDULE

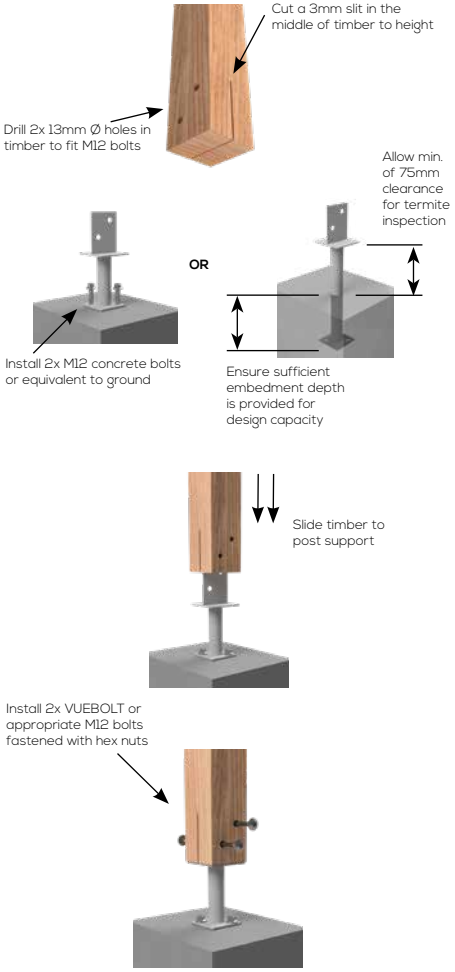

NOTES:

1. Embedment depth of VUETRADE Post Support should be determined and calculated by a Structural Engineer to achieve the reported design load. This usually depends on the type of concrete used, aggregate ratio etc.
2. 75mm clearance must be provided to conform to the requirements set out by AS3660.1:2014 - *Termite management, Part 1: New building work.*

DESIGN CAPACITY DATA

Table 35: Design Capacity of Centre Blade Post Support in different joint groups

Load Case	Design Capacity, Ndj (kN)					
	J3	J4	J5	JD3	JD4	JD5
Uplift capacity	11.3	9.0	7.8	14.1	11.3	9.9

NOTES:

1. Design capacity in Table 35 applies to VUETRADE Post Supports where 2x VUEBOLT or appropriate M12 bolts tightly fastened with hex nuts are installed.
2. Timber posts must have minimum dimensions of 90mm by 90mm section and shall be installed flat to the base of the post support.
3. Design capacities for post supports bolted or cast into concrete assumed that there is sufficient anchorage in the concrete to resist the pull-out force imposed by wind loading.
4. Design capacities in the above table are for wind uplift (vertical force direction) only and are obtained under strict in-house test conditions defined by AS1649-2001 – *Timber - Methods of test for mechanical fasteners and connectors* & uplift capacity requirements outlined in AS1720.1-2010 – *Timber structures, Part 1: Design methods.*
5. VUETRADE Post Supports should only be used to resist wind uplift / dead load as specified in the TDS and should not be assumed to provide lateral stability. Sufficient bracing should be provided and approved by a structural engineer for lateral stability.

VUETRADE for the builder

GALVANISED PIN STIRRUP POST SUPPORTS

G

BOLTED TO CONCRETE

CAST INTO CONCRETE

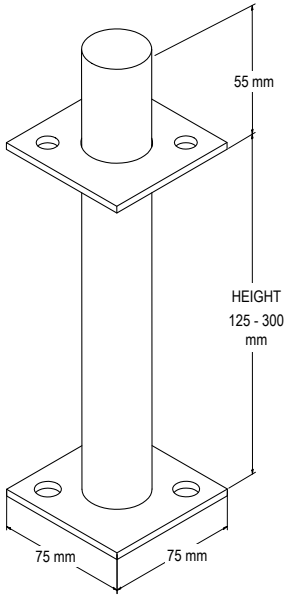

APPLICATION

Pin Stirrup Post Supports are brackets ideal for holding timber posts in applications where the post support needs to be totally concealed.

SPECIFICATION

VUETRADE Galvanised Pin Stirrup Post Supports are manufactured with a 32mm solid shaft in G300 steel and corrosion protected with Hot-Dipped Galvanised.

FASTENERS

Saddle: 2x M10 x 75mm appropriate coach screws

Base: 2x M12 concrete bolts or equivalent

SIZES

Product Code	Height (mm)	Box Qty
VPPS125	125	10
VPPS200	200	10
VPPS300	300	10

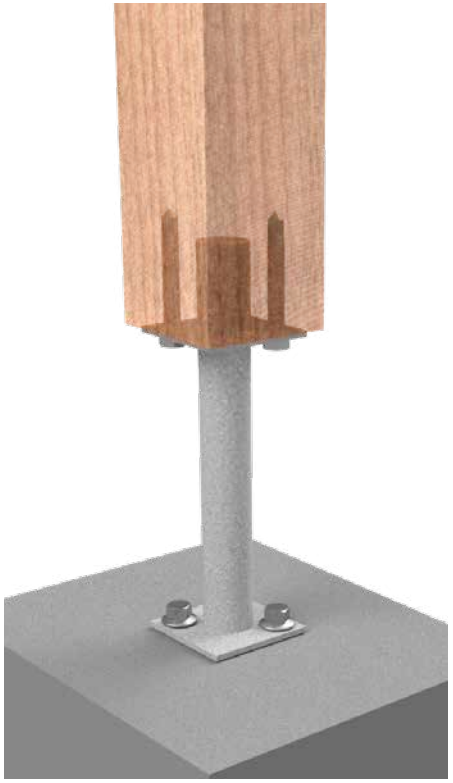

VUETRADE for the builder

INSTALLATION GUIDE AND BOLT FIXING SCHEDULE

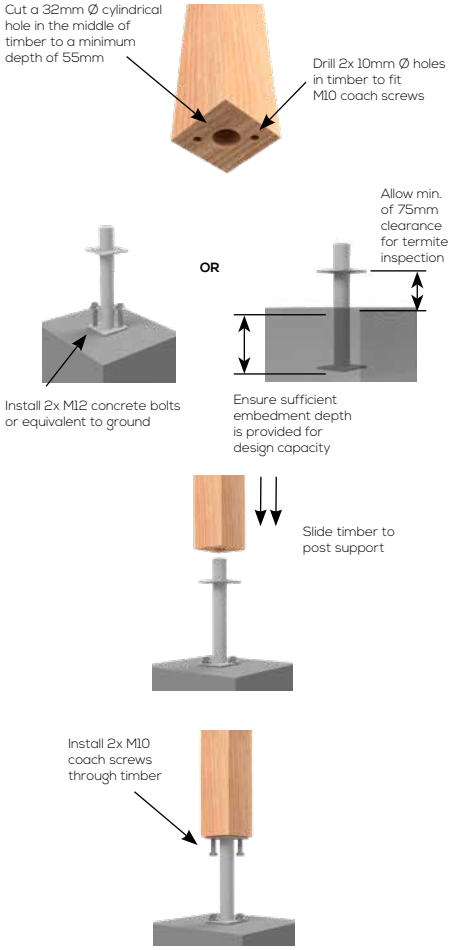

NOTES:

1. Embedment depth of VUETRADE Post Support should be determined and calculated by a Structural Engineer to achieve the reported design load. This usually depends on the type of concrete used, aggregate ratio etc.
2. 75mm clearance must be provided to conform to the requirements set out by AS3660.1:2014 - *Termite management, Part 1: New building work.*

DESIGN CAPACITY DATA

Table 36: Design Capacity Table of Pin Stirrup Post Support fastened with 2x M10 coach screws

All post sizes (mm)	J3	J4	J5	JD3	JD4	JD5
	5.1	3.5	2.6	6.4	4.4	3.3

NOTES:

1. Design capacity in Table 36 applies to VUETRADE Post Supports where 2x M10 coach screws are installed to the timber through pre-drilled holes at the bottom of post support top plate.
2. Timber posts must have minimum dimensions of 90mm by 90mm section and shall be installed flat to the base of the post support.
3. Design capacities for post supports bolted or cast into concrete assumed that there is sufficient anchorage in the concrete to resist the pull-out force imposed by wind loading.
4. Design capacities in the above table are for wind uplift (vertical force direction) only.
5. VUETRADE Post Supports should only be used to resist wind uplift / dead load as specified in the TDS and should not be assumed to provide lateral stability. Sufficient bracing should be provided and approved by a structural engineer for lateral stability.
6. Design capacities in Table 36 are based on Category 1 joints where it is applicable for failures that would be unlikely to affect an area of greater than 25m2. For Category 2 and Category 3 joints, design capacities in table are modified by multiplying 0.941 and 0.882 respectively.

VUETRADE for the builder

GALVANISED CONCEALED BOLT DOWN POST SUPPORTS

G

BOLTED TO CONCRETE

APPLICATION

An alternative to the traditional U-shaped bolt down post supports. This T Blade provides excellent support strength and an architectural and concealed finish.

SPECIFICATION

VUETRADE Concealed Bolt Down Post Supports are manufactured out of G300 Z275 steel in 3mm thickness. The concealing caps are manufactured in Stainless Steel 304.

- 145mm Blade Height (including base plate)
- 80mm Blade Width
- Hot Dipped Galvanised Blade
- SS304 concealing caps

FASTENERS

Blade: 3x Zinc-Nickel Coated VUEBOLT or appropriate M12 bolts with hex nuts

Base: 2x M12 concrete bolts or equivalent

SIZES

Product Code	Size (mm)	Bolt Size	Box Qty
VCBPS90	90	M12	10

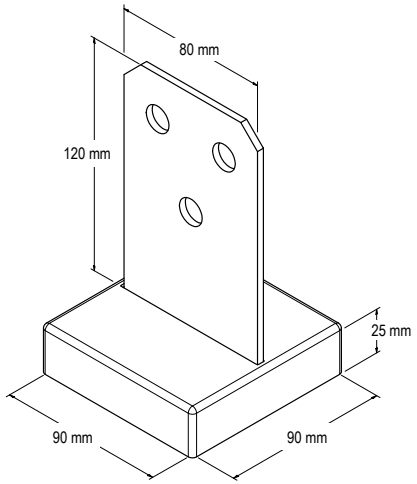

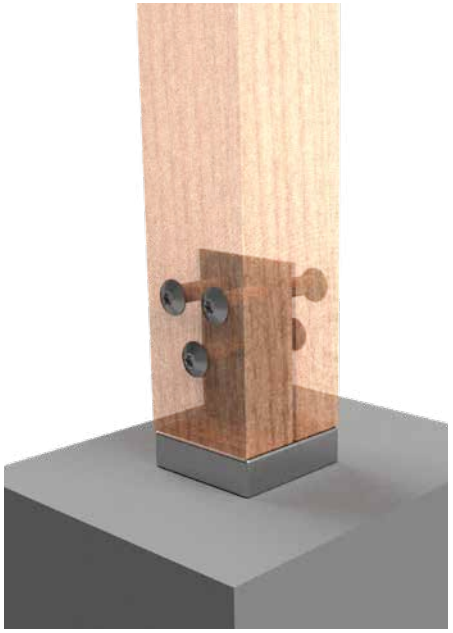

Bellevue Group Australasia are continuously working to develop and improve our product range.
We reserve the right to change specifications, etc. without notice. For our full disclaimer, refer to page 2.

VUETRADE for the builder

Timber Connectors
Compliance Data

INSTALLATION GUIDE AND BOLT FIXING SCHEDULE

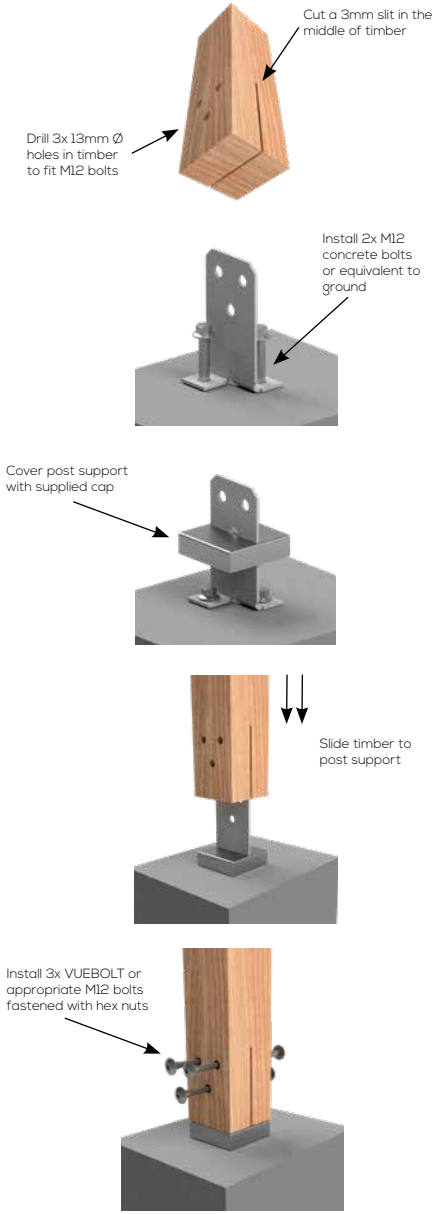

DESIGN CAPACITY DATA

Table 37: Concealed Bolt Down Post Support Design Capacity

Load Direction to Grain	Design Capacity, kN
Parallel to Grain	32.8 kN

NOTES:

1. Design capacity in Table 37 applies to VUETRADE Post Supports where 2x M12 bolts are installed and tightly fastened with nuts.
2. Timber posts must have minimum dimensions of 90mm by 90mm section and shall be installed flat to the base of the post support.
3. Design capacities in the above table are for wind uplift (vertical force direction) only and are obtained under strict in-house test conditions defined by AS1649-2001 – *Timber - Methods of test for mechanical fasteners and connectors* & uplift capacity requirements outlined in AS1720.1-2010 – *Timber structures, Part 1: Design methods*.
4. VUETRADE Post Supports should only be used to resist wind uplift / dead load as specified in the TDS and should not be assumed to provide lateral stability. Sufficient bracing should be provided and approved by a structural engineer for lateral stability.

VUETRADE for the builder

GALVANISED ADJUSTABLE POST SUPPORTS

APPLICATION

Adjustable Post Supports are brackets ideal for fixing uncommon or large sizes of timber posts, installed by bolting onto concrete.

SPECIFICATION

VUETRADE Adjustable Post Support are manufactured from 4mm thick G300 steel and Hot Dipped Galvanised for corrosion protection. Available in two sizes to suit a variety of timber post sizes.

FASTENERS

Saddle: 1x appropriate M10 bolt with hex nut, **OR:**
2x M10 coach screws for larger timber post sizes

Base: 2x M10 appropriate anchor bolts or equivalent

SIZES

Product Code	Height (mm)	Thickness (mm)	Box Qty
VAPS75	75	4	10
VAPS160	160	4	10

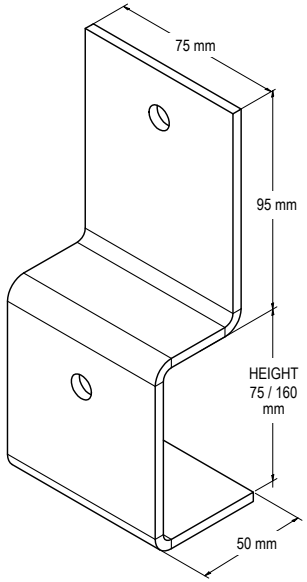

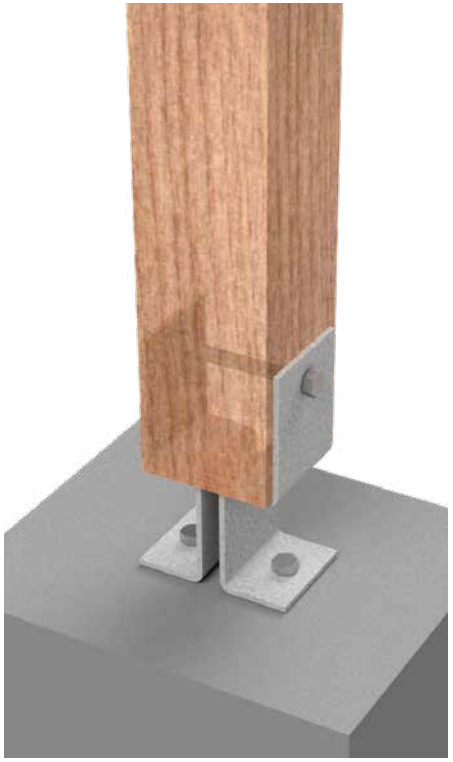

Bellevue Group Australasia are continuously working to develop and improve our product range.
We reserve the right to change specifications, etc. without notice. For our full disclaimer, refer to page 2.

VUETRADE for the builder

INSTALLATION GUIDE AND BOLT FIXING SCHEDULE

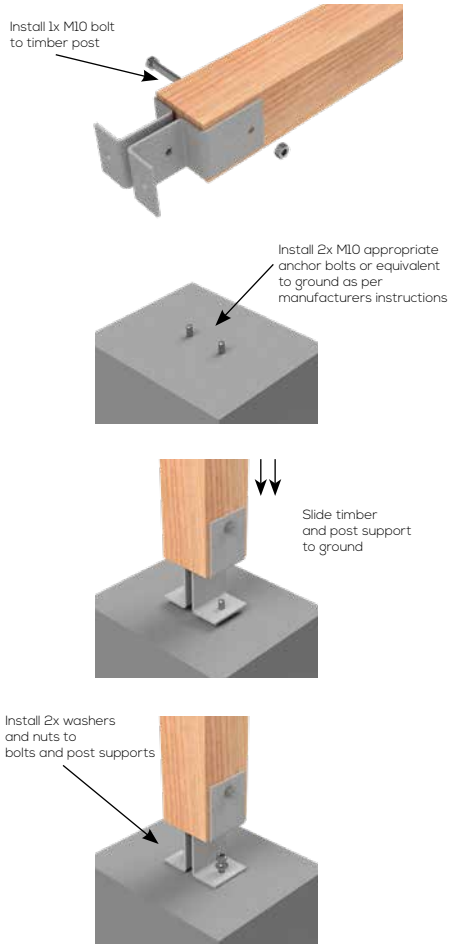

1. Install 1x M10 bolt, or 2x M10 coach screws to fasten post support to timber post.
2. Ensure that suitable M10 concrete bolts are used when fastening post support to ground.
3. Use only galvanised bolts with galvanised post supports, usage of other steel materials bolts with galvanised post support may lead to bimetallic corrosion.
4. For larger timber sizes, use 2x M10 coach screws.

DESIGN CAPACITY DATA

Table 38: Adjustable Post Support design capacities [used in pairs]

Load Case	Design Capacity, Ndj (kN)
	JD4
Uplift capacity	16 kN

NOTES:

1. Design capacity in Table 38 applies to VUETRADE Adjustable Post Supports where 2x M10 bolts are installed and tightly fastened with hex nuts (where applicable)
2. Bolts at the base of the post supports must have sufficient anchorage to resist wind uplift.
3. Timber post dimensions must have a minimum dimension of 75mm by 75mm section.
4. Design capacities in Table 38 provides capacity for forces in the vertical direction (wind uplifts) only and are obtained under test conditions defined in AS1649-2001 – *Timber - Methods of test for mechanical fasteners and connectors* & uplift capacity requirements outlined in AS1720.1-2010 - *Timber structures, Part 1: Design methods.*
5. VUETRADE Post Supports should only be used to resist wind uplift / dead load as specified in the TDS and should not be assumed to provide lateral stability. Sufficient bracing should be provided and approved by a structural engineer for lateral stability.
6. Design capacity of post support may be limited by the withdrawal capacity of concrete bolts used to fasten post support to concrete ground. Ensure that suitable concrete bolts are used for above design capacity to be valid.

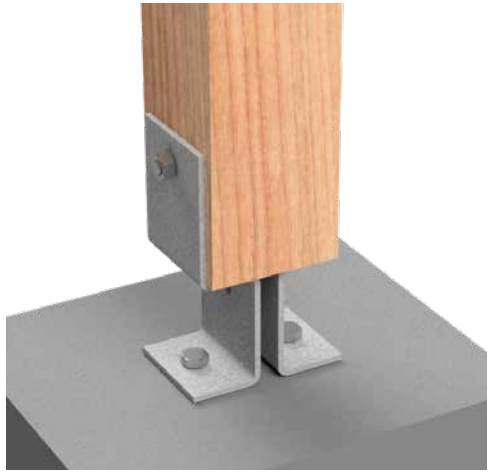

VUETRADE for the builder

GALVANISED TRADIES BOLT DOWN POST SUPPORTS

G

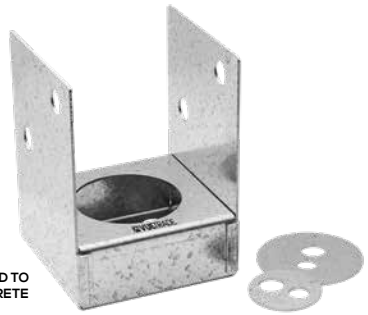

BOLTED TO CONCRETE

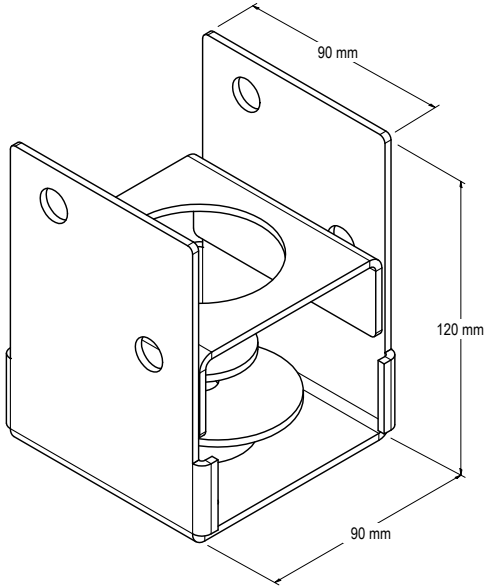

APPLICATION

VUETRADE Tradies Bolt Down Post support is an economical timber bolt down alternative to the standard bolt down post support, featuring a newly designed and engineered body. The adjustable cap allows the post support to switch between easy access mode and concealed mode.

SPECIFICATION

VUETRADE Tradies Bolt Down Post Supports are manufactured out of G300 Z275 in 1.6mm plate thickness.

FASTENERS

Saddle: 2x Zinc-Nickel Coated VUEBOLT or appropriate M12 bolts with hex nuts

Base: **Method 1:** 1x M12 concrete bolt or equivalent fastened with supplied washers, **OR:**

Method 2: 2x M12 concrete bolts or equivalent fastened to designated bolt holes, **OR:**

Method 3: Combination of above methods, using 3x M12 concrete bolts or equivalent fastened in designated bolt holes and along with supplied washers

SIZES

Product Code	Size (mm)	Box Qty
VTBPS90	90	20

INSTALLATION GUIDE AND BOLT FASTENING SCHEDULE

Drill 2x 13mm Ø holes in timber to fit M12 bolts

METHOD 1

Install 1x M12 concrete bolt or equivalent to ground

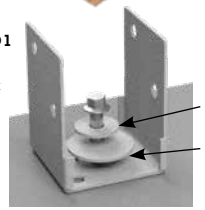

METHOD 2

Install 2x M12 concrete bolts or equivalent to ground

METHOD 3

Install 3x M12 concrete bolts or equivalent to ground

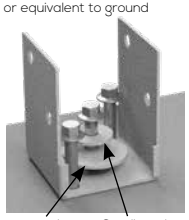

Bellevue Group Australasia are continuously working to develop and improve our product range.
We reserve the right to change specifications, etc. without notice. For our full disclaimer, refer to page 2.

VUETRADE for the builder

INSTALLATION GUIDE CONT'D

CONCEALED mode

Suitable for those who wish to achieve a neat and concealed finish.

OPEN mode

Suitable where re-tightening of bolts is needed after installation, or where larger tolerance is needed when fastening bolts.

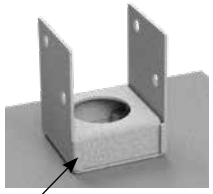

Place the post support cap to conceal the gap that shows bolts and washers within the post support.

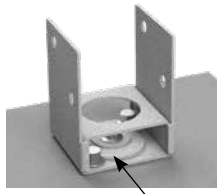

Place the post support cap to open to reveal the gaps showing internal bolts and washers.

Slide timber to post support

Install 2x VUEBOLT or appropriate M12 bolts fastened with hex nuts

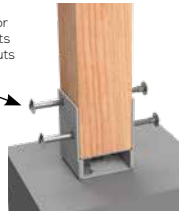

INSTALLATION NOTES:

1. Method 1 is suitable for installation where a larger fixing tolerance is needed. Ensure that concrete bolt is fixed with the small washer sitting on top of the large washer.
2. Method 2 is suitable for installation where precise and strong post support fixing is needed.
3. Method 3 is suitable for installation where high fixing strength of post support is necessary. Ensure that concrete bolt is fixed with the small washer sitting on top of the large washer.
4. Refer to technical data for fixing method capacity.

DESIGN CAPACITY DATA

Table 39: Design capacities for Tradies Bolt Down Post Support

	Fixing Method	Design Capacity, kN
Method 1	1x concrete bolt fixed into washer hole using provided washers	21
Method 2	2x concrete bolts fixed into designated bolt holes (with washer)	26
Method 3	2x concrete bolts into fixed bolt holes + 1x concrete bolt into washer hole using provided washers	29

NOTES:

1. The design capacities in table above shall be used / read strictly to their respective fixing methods. Failure to do so will compromise the product's strength.
2. The design capacities in table above apply to both concealed and open modes.
3. Design capacity for post supports bolted to concrete assume that there is sufficient anchorage in the concrete to resist the pull-out force imposed by wind loading.
4. VUETRADE Post Supports should only be used to resist wind uplift / dead load as specified in the TDS and should not be assumed to provide lateral stability. Sufficient bracing should be provided and approved by a structural engineer for lateral stability.
5. The design capacities in the table above are for forces in the vertical direction and are obtained under comprehensive test conditions.
6. Timber post dimensions must have minimum dimensions of 90mm by 90mm section and shall be installed flat to the base of the post support.

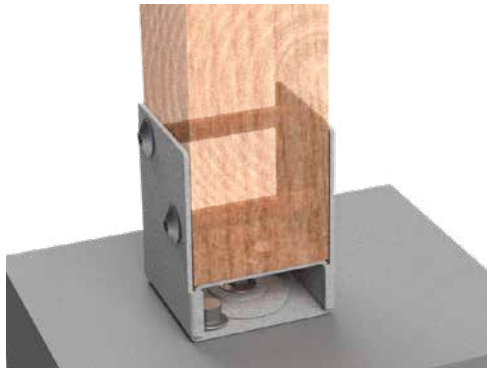

GALVANISED

VUETRADE for the builder

GALVANISED BOLT DOWN POST SUPPORTS

G

BOLTED TO CONCRETE

APPLICATION

Bolt Down Post Supports are connectors ideal for strong, concealed bolting of timber posts onto concrete bases.

SPECIFICATION

VUETRADE Galvanised Bolt Down Post Supports are manufactured out of G300 steel in 3mm thickness and corrosion protected with Hot-Dipped Galvanised as per required in AS/NZS 4680:2006.

FASTENERS

Saddle: 2x Zinc-Nickel Coated VUEBOLT or appropriate M12 bolts with hex nuts

Base: **Method 1:** 1x M12 concrete bolt or equivalent fastened with supplied washer, **OR:**

Method 2: 2x M12 concrete bolts or equivalent in specified bolt holes

For Galvanised Bolt Down Post Supports 115mm in size and over, only Method 2 is possible.

SIZES

Product Code	Stirrup Size (mm)	Saddle & Base Thickness (mm)	Box Qty
VBPS90	90	3	10
VBPS100	100	3	10
VBPS115	115	4	10
VBPS125	125	4	10

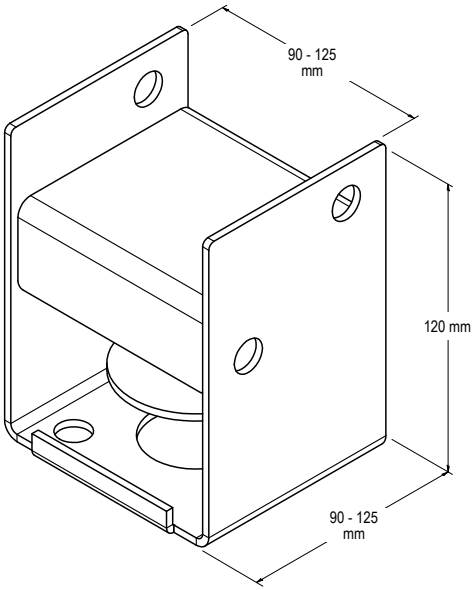

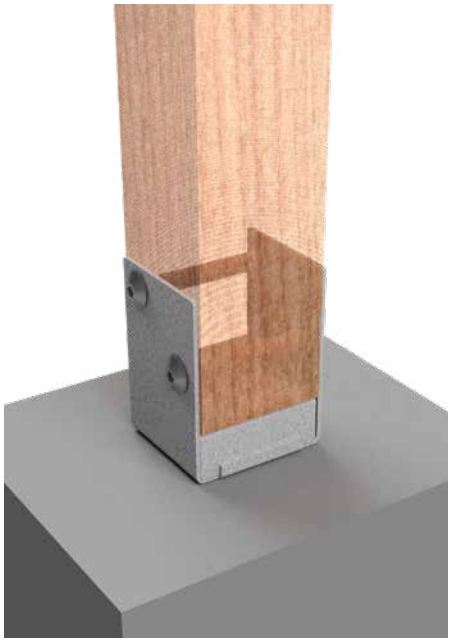

Bellevue Group Australasia are continuously working to develop and improve our product range.
We reserve the right to change specifications, etc. without notice. For our full disclaimer, refer to page 2.

VUETRADE for the builder

INSTALLATION GUIDE AND BOLT FIXING SCHEDULE

METHOD 1

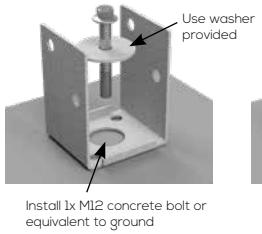

METHOD 2

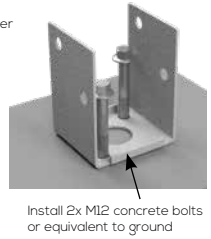

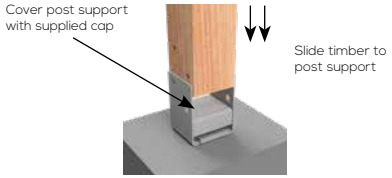

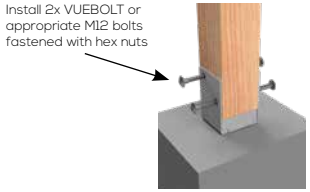

NOTES:

1. Method 1 is suitable when a larger tolerance of adjustment is needed after bolt holes are drilled. Washers are used in this fixing type to provide hold down strength to post support.
2. Method 2 is suitable when precise fixing and excellent holding strength are desired.

   Ensure that suitable M12 concrete bolts are used when bolting post support to ground.
3. Use only galvanised bolts with galvanised post support, usage of other steel materials bolt with galvanised post support may lead to bimetallic corrosion.
4. VUEBOLT may be used as an alternative to standard M12 bolts when fixing post support to timber posts for a concealed and smooth finish.

DESIGN CAPACITY DATA

Table 40: Design capacities of Bolt Down Post Support on various timber joint groups

Load Case	Design Capacity, Ndj (kN)					
	J3	J4	J5	JD3	JD4	JD5
Uplift capacity	9.4	7.5	6.5	11.8	9.4	8.2

NOTES:

1. Design capacity in Table 40 applies to VUETRADE Post Supports where 2x M12 bolts are installed and tightly fastened with hex nuts.
2. Bolts at the base of the post supports must have sufficient anchorage to resist wind uplift.
3. Timber post dimensions must have a minimum dimension of 90mm by 90mm section.
4. Design capacities in Table 40 are for forces in the vertical direction (wind uplifts) only and are obtained under test conditions defined in AS1649-2001 – *Timber - Methods of test for mechanical fasteners and connectors* & uplift capacity requirements outlined in AS1720.1-2010 – *Timber structures, Part 1: Design methods.*
5. VUETRADE Post Supports should only be used to resist wind uplift / dead load as specified in the TDS and should not be assumed to provide lateral stability. Sufficient bracing should be provided and approved by a structural engineer for lateral stability.
6. Design capacity of post support may be limited by the withdrawal tensile capacity of concrete bolts used to fasten post support to concrete ground. Ensure that suitable concrete bolts are used for above design capacity to be valid.

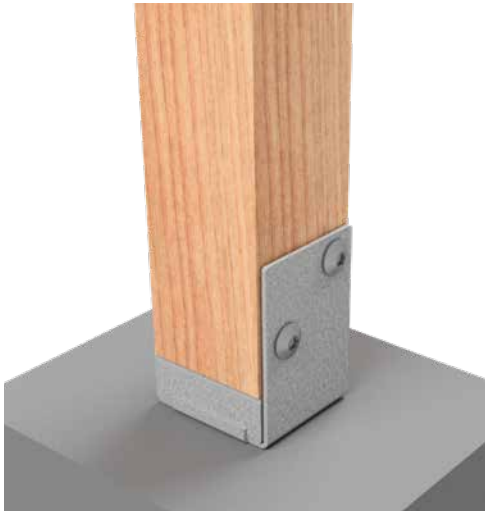

VUETRADE Timber Connectors is a division of **Bellevue Group Australasia**
technical@bellevuegroup.com.au **1300 850 520** www.vuetrade.com

VUETRADE for the builder

GALVANISED T-BLADE POST SUPPORTS

G

BOLTED TO CONCRETE

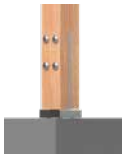

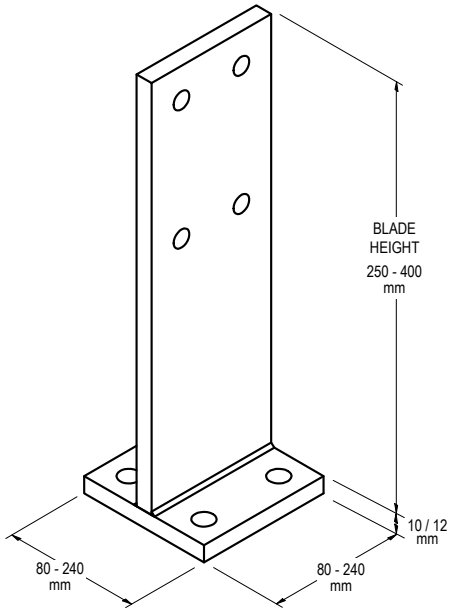

APPLICATION

VUETRADE Galvanised T-Blade Post Supports are used as a concealed post support on large decorative posts. Its 10 / 12 mm steel thickness throughout the product offers a strong, solid connection to be bolted down onto a concrete base.

SPECIFICATION

VUETRADE Galvanised T-Blade Post Supports are manufactured in 10 or 12mm steel and corrosion protected with Hot Dipped Galvanised as per AS/NZS 4680:2006.

FASTENERS

Saddle: 4x Zinc-Nickel Coated VUEBOLT or appropriate M12 / M16 / M20 bolts with hex nuts*

Base: 4x M12 / M16 / M20 concrete bolts or equivalent*

* Based on product size.

PRODUCT SIZES

Table 41: T-Blade Product Sizes

Product Code	Blade Height (mm)	Base Size (mm x mm)	Post Size Suitability (mm)	Bolt Size	Thickness (mm)
VBPTB 90100	250	80 x 80	90 – 100	M12	10
VBPTB 115140	275	110 x 110	115 – 140	M16	10
VBPTB 150180	300	140 x 140	150 – 180	M16	10
VBPTB 180200	350	180 x 180	180 – 250	M16	10
VBPTB 250350	400	240 x 240	250 - 350	M20	12

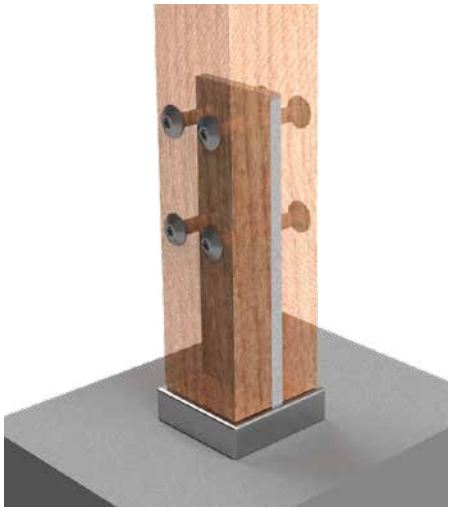

Bellevue Group Australasia are continuously working to develop and improve our product range.
We reserve the right to change specifications, etc. without notice. For our full disclaimer, refer to page 2.

VUETRADE for the builder

INSTALLATION GUIDE AND BOLT FIXING SCHEDULE

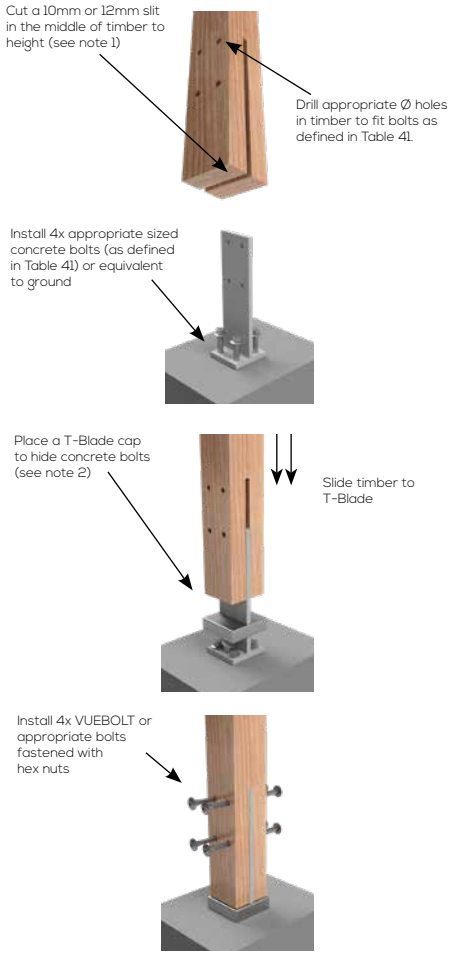

NOTES:

1. VUETRADE has prepared a comprehensive cutting schedule for all sizes of T-Blade Post Supports containing precise cutting and drilling measurements. Refer to the VUETRADE website for cutting schedule.
2. T-Blade cap sold separately, VUETRADE recommends fitting T-Blade caps on the T-Blade Post Support for a concealed finish.
3. VUEBOLT may be used as an alternative to standard bolts when fixing post support to timber posts for a concealed and smooth finish.

DESIGN CAPACITY DATA

Table 42: Design capacity of T-Blade Post Support fixed with 4x bolts on various timber joint groups

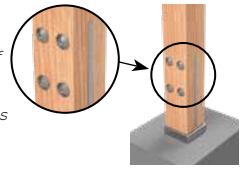

Joint Group	J3	J4	J5	JD3	JD4	JD5
M12 Bolt	47.4	37.7	32.6	57.0	47.4	41.4
M16 Bolt	57.0	57.0	57.0	57.0	57.0	57.0
M20 Bolt	57.0	57.0	57.0	57.0	57.0	57.0

Table 43: Design capacity of T-Blade Post Support fixed with 2x bolts on various timber joint groups

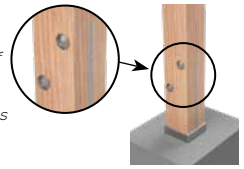

Joint Group	J3	J4	J5	JD3	JD4	JD5
M12 Bolt	23.7	18.8	16.3	29.5	23.7	20.7
M16 Bolt	42.3	33.3	28.8	52.3	42.3	36.7
M20 Bolt	57.0	50.8	42.4	57.0	57.0	57.0

NOTES:

1. Design capacities in the above tables may be limited by the withdrawal tensile capacity of concrete bolts used to fasten T-Blade to concrete ground. Ensure that suitable concrete bolts are used for above design capacity to be valid, otherwise reduce design capacities appropriately.
2. The design capacity of galvanised T-Blade is capped at 57kN.
3. Modification factors k1 for different load cases are adopted from AS1720.1-2010.
4. Design capacities in the above tables are based on Category 1 joints where it is applicable for failures that would be unlikely to affect an area of greater than 25m2. For Category 2 and Category 3 joints, design capacities from the table are multiplied by 0.941 and 0.882 respectively.
5. VUETRADE Post Supports should only be used to resist wind uplift / dead load as specified in the TDS and should not be assumed to provide lateral stability. Sufficient bracing should be provided and approved by a structural engineer for lateral stability.
6. Two bolts may be used instead of four, however strength verification must be conducted by a structural engineer to ensure that the two bolt usage is acceptable.
7. If fixing using two bolts, bolts should be fixed using non-adjacent bolt holes (use holes diagonally as shown in figure above).

VUETRADE for the builder

GALVANISED T-BLADE POST SUPPORT WITH LEG

G

BOLTED TO CONCRETE

CAST INTO CONCRETE

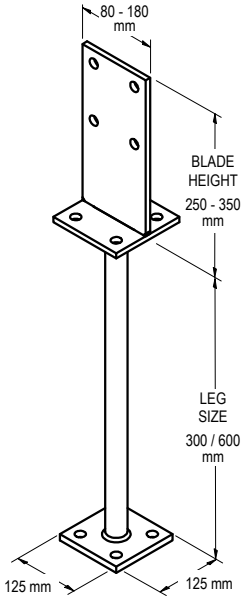

APPLICATION

VUETRADE Galvanised T-Blade Post Supports with Legs are concealed anchors ideal for coastal use, installed by bolting timber posts onto or setting them into concrete.

SPECIFICATION

VUETRADE Galvanised T-Blade Post Supports are manufactured in G300 steel and corrosion protected with Hot Dipped Galvanised.

FASTENERS

Saddle: 4x Zinc-Nickel Coated VUEBOLT or appropriate M12 / M16 bolts with hex nuts*

Base: 4x M12 / M16 concrete bolts or equivalent*

* Based on product size.

SIZES

All VUETRADE T-Blade Post Supports with Legs are 10mm in thickness.

Product Code	Blade Height (mm)	Base Size (mm x mm)	Suits Post Size (mm)	Bolt Size	Leg Dimensions (mm)
VHDBLPS 60080	250	80 x 80	90-100	M12	600 x 35Ø
VHDBLPS 600110	275	110 x 110	115-140	M16	600 x 35Ø
VHDBLPS 300140 SOLID	300	140 x 140	150-180	M16	300 x 35Ø
VHDBLPS 600140 SOLID	300	140 x 140	150-180	M16	600 x 35Ø
VHDBLPS 600180	350	180 x 180	180-200	M16	600 x 73Ø

* Custom sizes are also available, refer to the VUETRADE T-Blade Post Support with Leg webpage.

Bellevue Group Australasia are continuously working to develop and improve our product range.
We reserve the right to change specifications, etc. without notice. For our full disclaimer, refer to page 2.

VUETRADE for the builder

Timber Connectors
Compliance Data

INSTALLATION GUIDE AND BOLT FIXING SCHEDULE

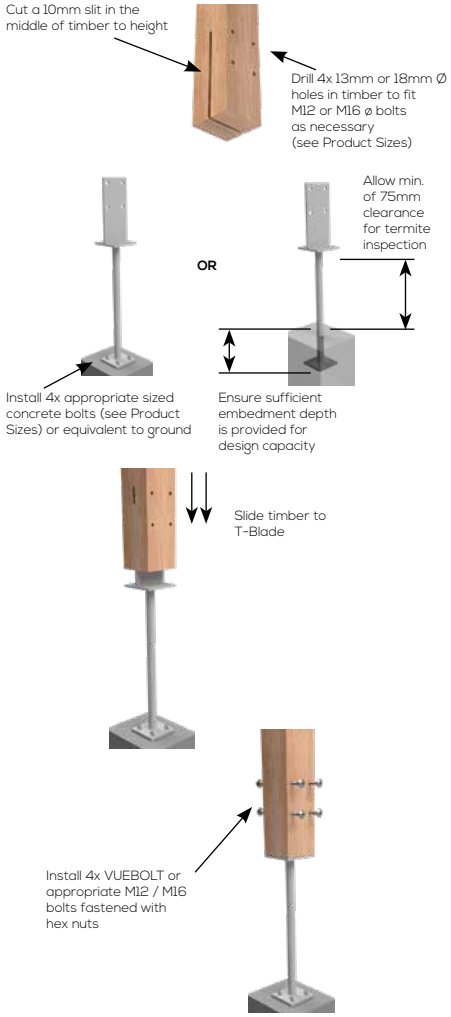

NOTES:

1. Embedment depth of the T-Blade post support should be determined and calculated by a Structural Engineer in order to achieve the reported design load. This usually depends on the type of concrete used, aggregate ratio etc.
2. 75mm clearance must be provided to conform to the requirements set out by AS3660.1:2014 - *Termite management, Part 1: New building work.*

DESIGN CAPACITY DATA

Table 44: Design capacity of T-Blade Post Support with Leg fixed with 4x bolts on various timber joint groups

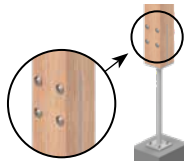

Joint Group	J3	J4	J5	JD3	JD4	JD5
M12 Bolt	47.4	37.7	32.6	57.0	47.4	41.4
M16 Bolt	57.0	57.0	57.0	57.0	57.0	57.0

Table 45: Design capacity of T-Blade Post Support with Leg fixed with 2x bolts on various timber joint groups

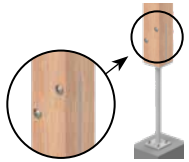

Joint Group	J3	J4	J5	JD3	JD4	JD5
M12 Bolt	23.7	18.8	16.3	29.5	23.7	20.7
M16 Bolt	42.3	33.3	28.8	52.3	42.3	36.7

NOTES:

1. The design capacity of Galvanised T-Blade is capped at 57kN. 57kN is the maximum uplift force from the test carried out before the bolt from the base of the grip failed. At this point, there were no signs of failure in the T-Blade except for minor cupping at its base.
2. The capacities were determined based on loads that are acting parallel to the grain of the timber.
3. Modification factors k1 for different load cases are adopted from AS1720.1-2010.
4. Design capacities in the above tables are based on Category 1 joints where it is applicable for failures that would be unlikely to affect an area of greater than 25m2. For Category 2 and Category 3 joints, design capacities from the table are multiplied by 0.941 and 0.882 respectively.
5. VUETRADE Post Supports should only be used to resist wind uplift / dead load as specified in the TDS and should not be assumed to provide lateral stability. Sufficient bracing should be provided and approved by a structural engineer for lateral stability.
6. Two bolts may be used instead of four, however strength verification must be conducted by a structural engineer to ensure that the two bolt usage is acceptable.
7. If fixing using two bolts, bolts should be fixed using non-adjacent bolt holes (use holes diagonally as shown in figure above).

VUETRADE Timber Connectors is a division of **Bellevue Group Australasia**
technical@bellevuegroup.com.au **1300 850 520** www.vuetrade.com

VUETRADE for the builder

GALVANISED ANT CAPS

G

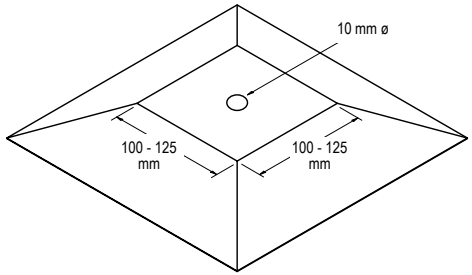

APPLICATION

VUETRADE Galvanised Ant Caps provide a barrier between supporting timber, metal or masonry stumps / bases and floor timbers; and are specifically for use in areas where termites invade and degrade timber construction.

SPECIFICATION

VUETRADE Galvanised Ant Caps are manufactured using G300 Z275 material with a thickness of 0.5mm.

SIZES

Product Code	Size (mm)	Flange Size	Details
VAC10025	100 x 100	25mm	With Hole
VAC10025NH	100 x 100	25mm	No Hole
VAC10050	100 x 100	50mm	With Hole
VAC10050NH	100 x 100	50mm	No Hole
VAC12525	125 x 125	25mm	With Hole
VAC12525NH	125 x 125	25mm	No Hole
VAC12550	125 x 125	50mm	With Hole
VAC12550NH	125 x 125	50mm	No Hole
VAC23050NH	230 x 230	50mm	No Hole
VAC23011550NH	230 x 115	50mm	No Hole

AS3660.1:2014 TERMITE MANAGEMENT PART 1: NEW BUILDING WORK

Material Specifications on Galvanised Ant Caps

- Minimum thickness of 0.5mm.
- Steel shall be galvanised in accordance to AS/NZS4680:2006 with zinc and coating class of at least Z275.

Design Specifications

- The ant cap shall have a plane surface of size and shape to fully cover the top of the post.
- The ant cap shall project on all sides so that no edge shall be less than 40mm from the vertical face of the wall when the edges are turned down at an angle from the horizontal face. (i.e. flange size should be more than 40mm)
- Ensure that correct ant cap materials are used in appropriate corrosion exposure zones to minimise corrosion attack. For high corrosion exposure zones, Stainless Steel ant caps are recommended.
- Ensure that Ant Cap does not come in contact with other components of building work where electrolytic corrosion may occur and induce accelerated corrosion, i.e. Galvanised Ant Cap should not come in contact with a Stainless Steel frame.

Bellevue Group Australasia are continuously working to develop and improve our product range.
We reserve the right to change specifications, etc. without notice. For our full disclaimer, refer to page 2.

VUETRADE for the builder

GALVANISED R2 BRICK VENEER TIES

APPLICATION

VUETRADE Brick Veneer Ties function as a means of joining the cavity of wall frames and brickwork together and are often installed during construction. Brick Ties are important in the stability of a building.

They are suitable for use with TIMBER FRAMES only.

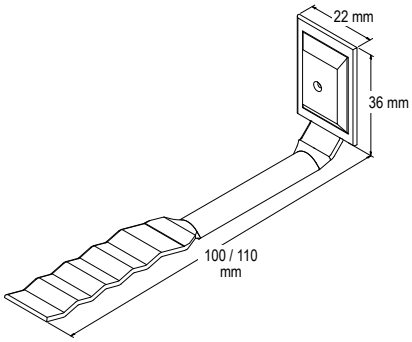

LIGHT DUTY WITH NAILS

G R2

SPECIFICATION

VUETRADE Light Duty Brick Veneer Ties are rated as light duty conforming to AS2699.1:2020 and AS3700:2018.

Cavity Width	50mm
Usage	10km or further from breaking surf, or 1km or further to sheltered coastal
Fixing	Use only the supplied VUETRADE 30mm x 3.2mm Ø Galvanised Fixing Nail

MEDIUM DUTY WITH SCREWS

G R2

SPECIFICATION

VUETRADE Medium Duty Brick Veneer Ties are rated as medium duty conforming to AS2699.1:2020 and AS3700:2018.

Cavity Width	50mm
Usage	10km or further from breaking surf, or 1km or further to sheltered coastal
Fixing	Use only the supplied VUETRADE 30mm x 4.5mm Ø Galvanised Fixing Screw

DETAILS

Product Code	Material	Durability Classification	Box Qty
VBTLDR2	Z600 Galv.	R2	150
VBTMDR2	Z600 Galv.	R2	150

R2

DURABILITY CLASSIFICATION

10km or further from breaking surf, or 1km or further to sheltered coastal

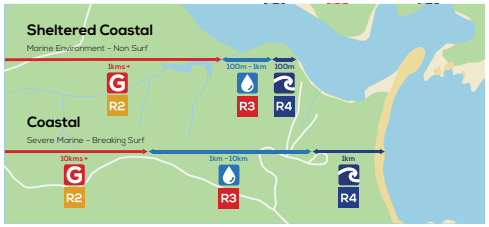

The suitability of brick ties in different environmental conditions can be determined by reading off the specification area chart based on the type of environment and the distance where the brick ties will be used.

It is important to use the recommended brick tie classification to reduce the risk of brick tie corrosion that may affect the overall structure integrity.

Note: VUETRADE does not cover corrosion protection on heavy industrial areas as additional or highly specific requirements may be required.

For more information see Page 133.

VUETRADE for the builder

GALVANISED DOUBLE SLEEVE EXPANSION TIES

G R2

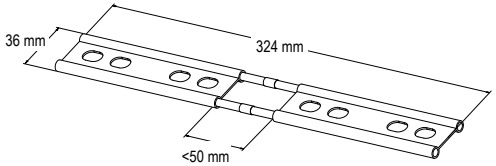

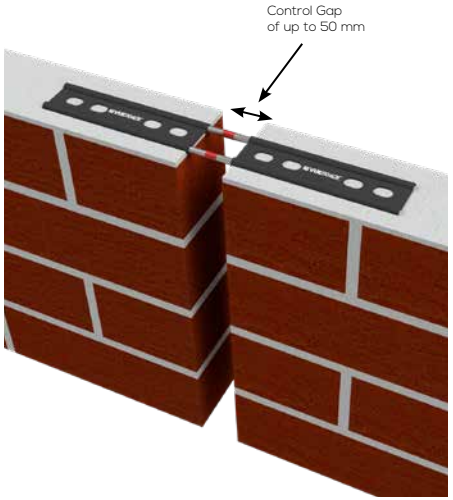

APPLICATION

VUETRADE Double Sleeve Expansion Ties are a rod tie designed for vertical expansion joints. The rods have a plastic casing on each end which is laid into either side of the construction joint allowing movement.

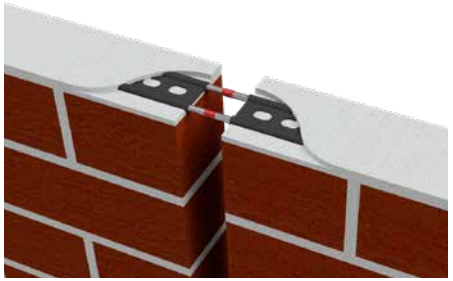

SPECIFICATION

Bar Diameter:	5.5mm
Material:	G300 corrosion protected to 350g/m2
Sleeve:	Polypropylene

DURABILITY

VUETRADE Double Sleeve Expansion Ties complies with the durability classification of AS2699.1:2020 as follow:

VTDSG (Galvanised): Durability classification R2

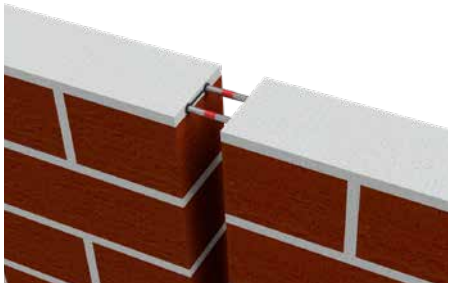

SIZES

Product Code	Maximum Control Gap	Durability Classification	Box Qty
VTDSG	50mm	R2	50

Bellevue Group Australasia are continuously working to develop and improve our product range.
We reserve the right to change specifications, etc. without notice. For our full disclaimer, refer to page 2.

VUETRADE for the builder

GALVANISED EXPANSION TIES

G R2

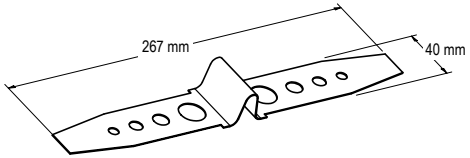

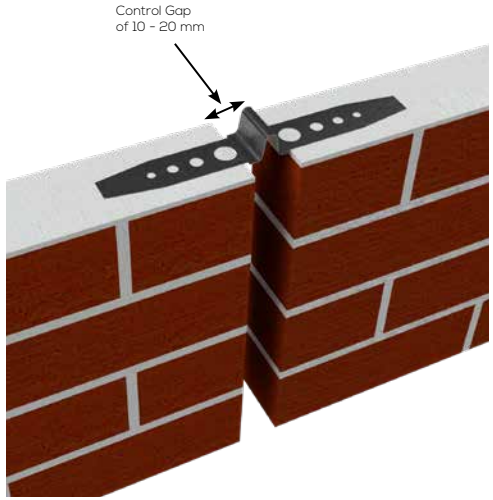

APPLICATION

VUETRADE Expansion Ties features two ends with holes designed to hold in bed joints and a pre-bent middle section to provide a 10-20mm control gap during construction to accommodate for expansions.

SPECIFICATION

Material:	G300
Corrosion protection:	Z600

DURABILITY

VUETRADE Expansion Ties are manufactured in Z600 Galvanised Steel which gives a durability classification of R2 as per AS2699.1:2020.

This classification allows the Expansion Ties to be used no closer than 10km to surf coast, or 1km to sheltered coast. VUETRADE Expansion Ties are tested and are compliant to AS2699.2:2020.

SIZES

Product Code	Maximum Control Gap	Durability Classification	Box Qty
VTEXTG	20mm	R2	60

VUETRADE Timber Connectors is a division of **Bellevue Group Australasia**
technical@bellevuegroup.com.au **1300 850 520** www.vuetrade.com

VUETRADE for the builder

GALVANISED SUB FLOOR PUNCHED GRID VENTS

G

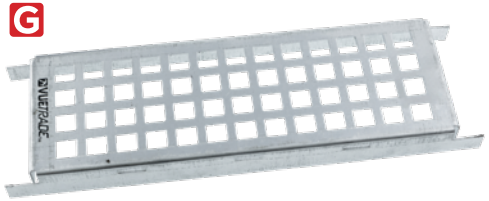

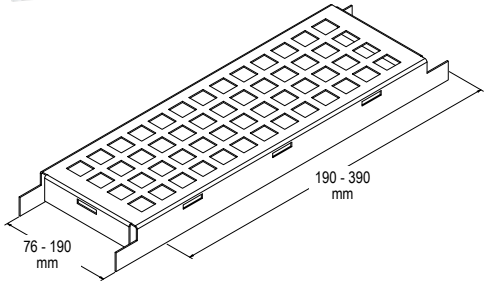

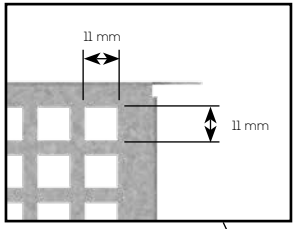

APPLICATION

VUETRADE Sub Floor Punched Grid Vents provide ventilation in brick and block walls. These vents are designed to be inserted into the wall during masonry construction. In areas that are prone to bush fires, anti-spark mesh panel insert is also available to a rating of BAL-40.

SPECIFICATION

VUETRADE Sub Floor Punched Grid Vents are manufactured in G300 Z275 material with a thickness of 0.8mm.

Material:	G300 Z275 Galvanised Steel
Hole Size:	11mm by 11mm (See figure below)
Air Flow:	Refer to table below

SIZES

Product Code	Size (mm)	Air Flow (mm2)	Box Qty
VTSFV230X76	230 x 76	6 178	20
VTSFV230X76SLIM	230 x 76	7 615	20
VTSFV230X160	230 x 160	13 901	20
VTSFV190X90	190 x 90	6 535	20
VTSFV190X190	190 x 190	14 376	20
VTSFV390X90	390 x 90	13 663	20
VTSFV390X190	390 x 190	30 059	20

ANTI SPARK MESH PANEL INSERTS

Material:	Stainless Steel 316
Wire diameter:	0.9mm
Aperture:	1.64mm
BAL Rating :	Up to and including BAL-40 (40kW/m2)

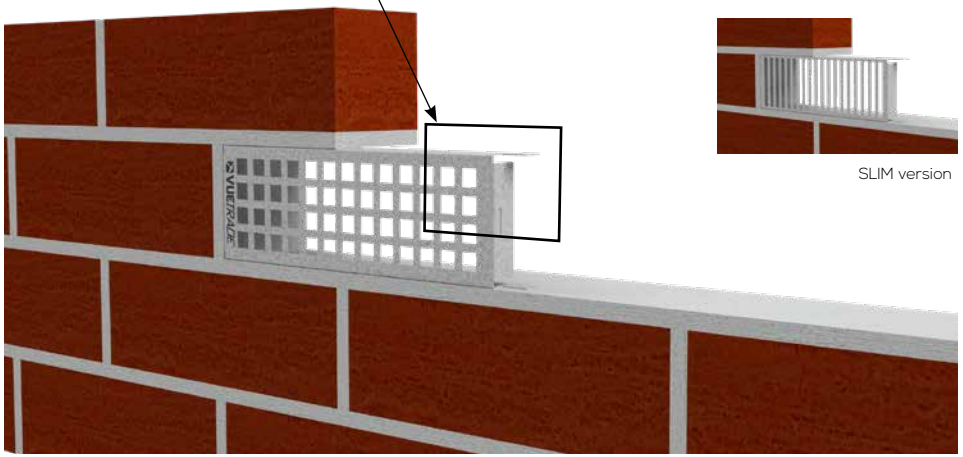

SLIM version

Bellevue Group Australasia are continuously working to develop and improve our product range.
We reserve the right to change specifications, etc. without notice. For our full disclaimer, refer to page 2.

GALVANISED SUB FLOOR LOUVRED VENTS

G

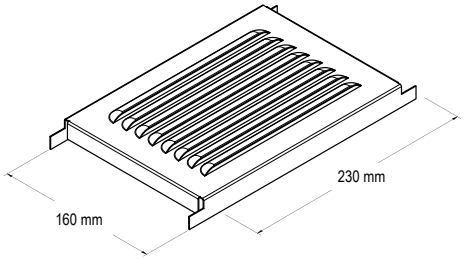

APPLICATION

VUETRADE Louvred Vents function as a means of providing natural ventilation primarily in masonry construction. Often installed during brick laying at the subfloor level, these vents:

1. Allow free air space to remove moisture in wall cavities and subfloor spaces;
2. Remove condensation that may corrode timber/ masonry connectors i.e. wall ties, expansion ties etc.

SPECIFICATION

Steel Material	G300 Steel
Corrosion protection	Z275 in accordance to AS1397:2021
Thickness	0.8mm

SIZES & AIR FLOW AREA

Product Code	Size (mm)	Air Flow (approx.)	Box Qty
VTSFL230X160	230 x 160	5 480 mm2	10

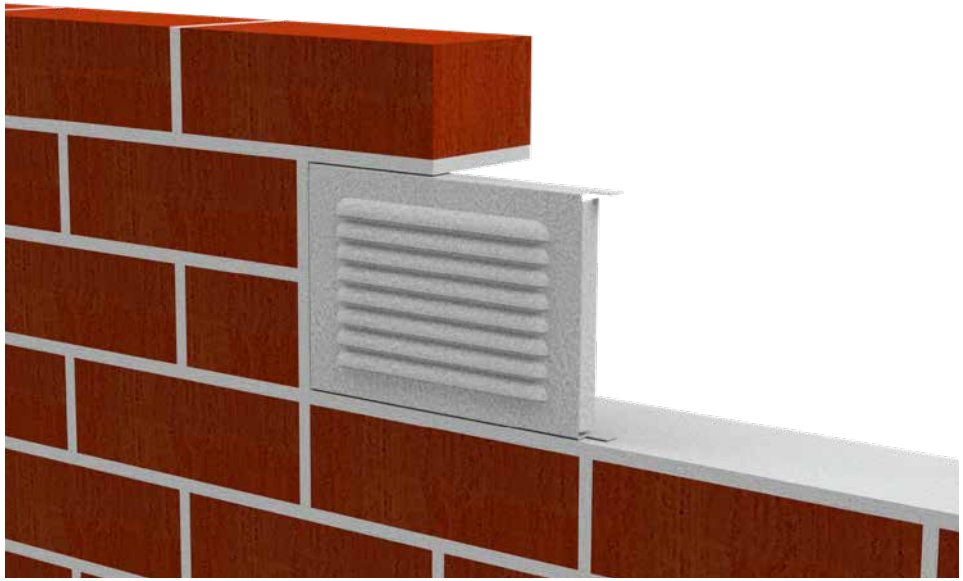

VUETRADE for the builder

GALVANISED FLAT FACED PUNCHED VENTS

G

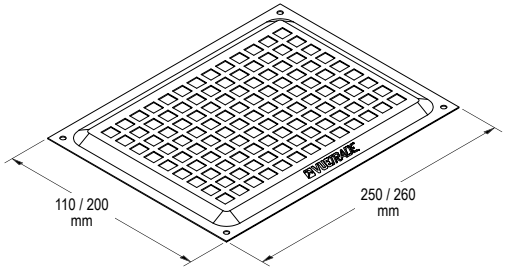

APPLICATION

VUETRADE Flat Faced Punched Grid vents are face fixed vents that provide efficient ventilation in applications that require air flow, removing moisture in floor joist and wall cavities, regulating temperature and dehumidification purposes. Sufficient ventilation should be provided during construction, either in the subfloor level or wall cavities, to minimise the risk of corrosion attack on connector products and to prevent mould build-up due to trapped moisture and condensation.

SPECIFICATION

Steel Material	G300 Steel
Corrosion protection	Z275 in accordance to AS1397:2021
Thickness	0.8mm
Hole Size	11mm by 11mm

SIZES & AIR FLOW AREA

Product Code	Size (mm)	Air Flow (approx.)	Box Qty
VTFF250X110	250 x 110	5 808 mm2	20
VTFF260X200	260 x 200	14 157 mm2	20

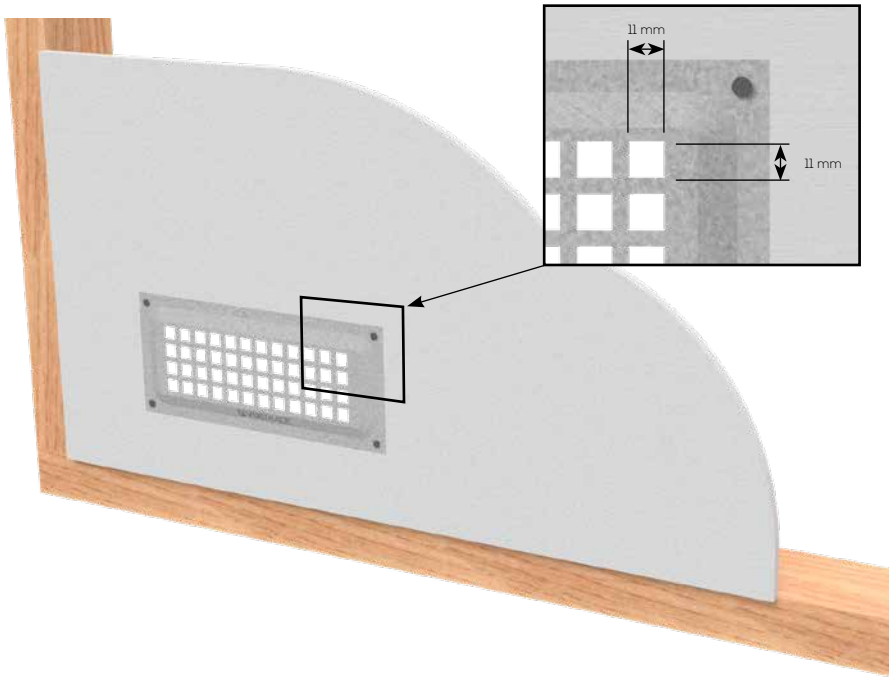

Bellevue Group Australasia are continuously working to develop and improve our product range.
We reserve the right to change specifications, etc. without notice. For our full disclaimer, refer to page 2.

VUETRADE for the builder

GALVANISED FLAT FACED LOUVRED VENTS

G

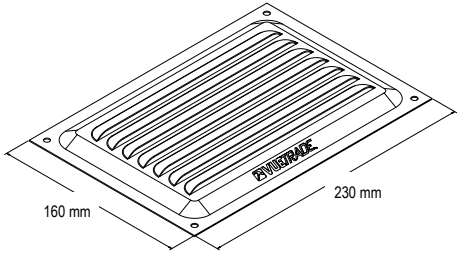

APPLICATION

VUETRADE Flat Faced Louvred Vents function as a means of providing natural ventilation primarily in masonry construction. Usually installed after brickwork is complete, these vents:

1. Allow free air space to remove moisture in wall cavities and subfloor spaces;
2. Remove condensation that may corrode timber/masonry connectors i.e. wall ties, expansion ties etc.

SPECIFICATION

Steel Material	G300 Steel
Corrosion protection	Z275 in accordance with AS1397:2021
Thickness	0.8mm

SIZES & AIR FLOW AREA

Product Code	Size (mm)	Air Flow (approx.)	Box Qty
VTFFLS230X160	230 x 160	5 480 mm2	20

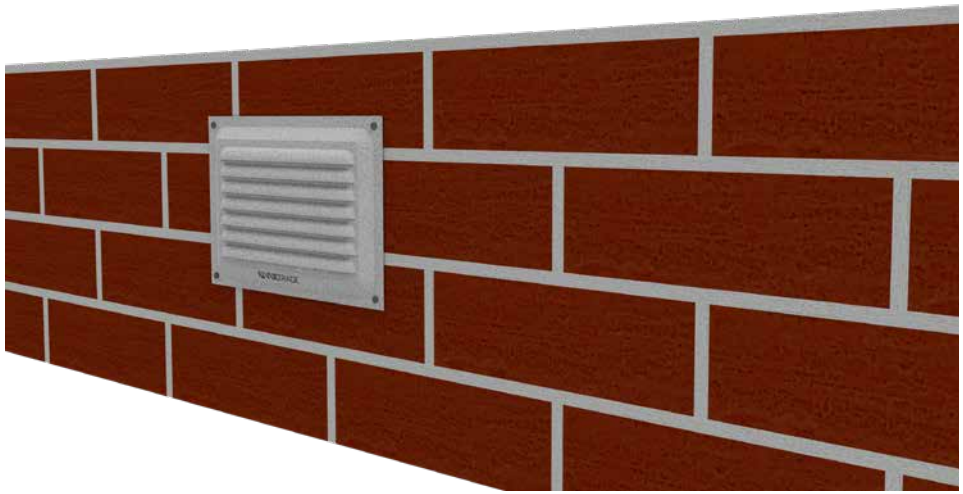

VUETRADE Timber Connectors is a division of **Bellevue Group Australasia**
technical@bellevuegroup.com.au **1300 850 520** www.vuetrade.com

VUETRADE for the builder

SUBFLOOR VENTILATION SIZE:
RECOMMENDED PRACTICE IN ACCORDANCE WITH THE NATIONAL CONSTRUCTION CODE (NCC) 2022

The National Construction Code 2022 specifies that all subfloors shall be fitted with ventilation to allow air flow in the subfloor spacing area. The code recommends that the subfloor punched vent be installed in accordance to the climatic zone shown in Figure 6.2.1a from ABCB Housing Provisions of the NCC 2022 below.

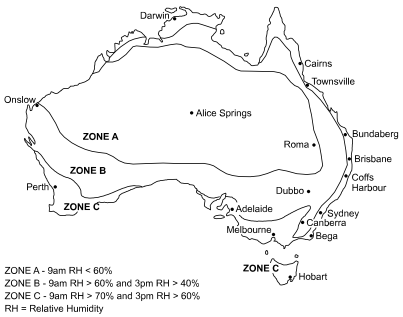

Figure 6.2.1a - Climatic zones based on relative humidity (Source: ABCB Housing Provisions, NCC 2022)

© Commonwealth of Australia and the States and Territories 2022, published by the Australian Building Codes Board.

Table 6.2.1a: Subfloor openings

Climatic zone	Minimum aggregate subfloor ventilation with no membrane (mm^2/m of wall)	Minimum aggregate subfloor ventilation openings with ground sealed with impervious membrane (mm^2/m of wall)
A	2000	1000
B	4000	2000
C	6000	3000

© Commonwealth of Australia and the States and Territories 2022, published by the Australian Building Codes Board.

The minimum required sub-floor ventilation per linear metre of wall is recommended in Table 6.2.1a in the ABCB Housing Provisions of the NCC 2022 to allow sufficient air flow within the subfloor space.

Taking an example of using the VUETRADE Subfloor Punched Vent 230 x 76mm (VTSFV230X76) on an 8m length wall on the ground with no membrane in Zone C of the climatic zone chart, the number of vents required as per NCC 2022 can be calculated as follows,

- Airflow of Punched Vent 230mm x 76mm: 6178mm2
- Calculate the total ventilation area required on the wall based on NCC 2022 minimum requirement based on desired wall length (8m in this example) = 8m x 6000mm2/m = 48000mm2
- Number of vents required (8m length wall) = Total ventilation area (mm2)/Air flow area of one vent (mm2) = 48000mm2/6178mm2 = 7.76 ≈ 8 vents (rounded up)

INSTALLATION GUIDE (BASED ON NCC 2022)

The vents shall then be installed in even spacing along the length of the wall and no more than 600mm in from the corner. In areas which are prone to bushfire attack up to and including BAL-40, anti-spark stainless steel wire mesh shall be installed in the vent to prevent entry of ember or wind carried burning debris into the house through the subfloor vent. It is advisable to ensure the minimum ventilation requirement is met as the anti-spark wire mesh may restrict the total airflow required for ventilation.

NOTE:

The above guide serves as a design guide based on the National Construction Code 2022. Consult a qualified engineer or architect to ensure sufficient ventilation is provided for subfloor spacing, adhering to applicable local building codes and Australian Standards.

VUETRADE for the builder

Timber Connectors
Compliance Data

ANTI SPARK MESH

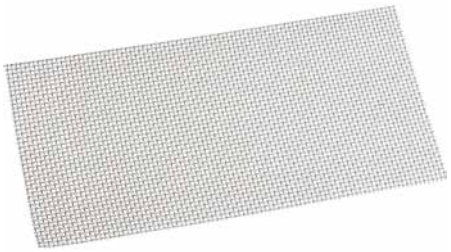

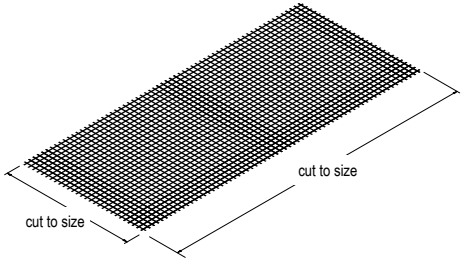

APPLICATION

VUETRADE Anti Spark Mesh provides protection against ember attack in areas that are susceptible to bushfires. The mesh is for use in many applications such as protecting windows, covering weepholes, roof vents, gutters and doors.

SPECIFICATION

VUETRADE Anti Spark Mesh is manufactured in Stainless Steel 316 to ensure corrosion resistance, with wire diameter of 0.9mm forming a maximum aperture of 1.64mm.

VUETRADE Anti Spark Mesh complies to the Australian Standard AS 3959:2018 – 'Construction of Building in Bush fire-prone Areas' where the mesh is to be made of corrosion resistant steel with maximum aperture of 2mm in exposure up to and including BAL 40 (40kW/m2).

Wire diameter:	0.9mm
Aperture:	1.64mm
BAL Rating :	Up to and including BAL-40 (40kW/m2)

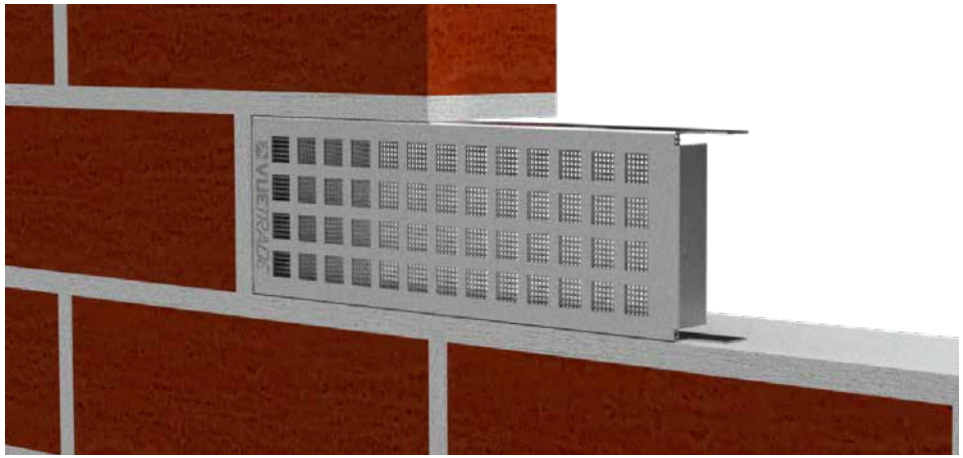

Mesh used within a Sub Floor Vent

STAINLESS STEEL

VUETRADE for the builder

ZINC-NICKEL COATED VUEBOLT

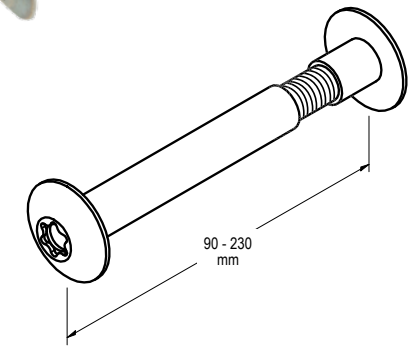

APPLICATION

VUEBOLT features a male and female bolt working together as a complete system, providing a quick, neat and concealed finish. Upon installation, the concealed feature leaves an unobstructed finish on both end of post supports or timber.

The VUEBOLT serves as an alternative to:

- Cup Head Bolts
- Hex Head Bolts
- Coach Bolts
- Star Drive Bolts;

and is quick and easy to install using the T50 Wrenches as part of the VUEBOLT system.

SPECIFICATION

VUEBOLTs are manufactured from high quality carbon steel in accordance to Australian Standard AS1111.1:2015 / ISO 898-1 (same standard of property class 4.6)

As the VUEBOLT features a two-part system (male and female bolt), it is designed and tested to conform to the mechanical properties of a range of metric hexagon bolts of a similar size. Further details on the mechanical strength of the VUEBOLT will be specified in following section of technical data.

SIZES

Table 47: Available VUEBOLT sizes

Product Code	Working length (mm)	Diameter (mm)	Pack Qty
VUEBOLT90110	90 – 110mm	M10	2
VUEBOLT90110HD	90 – 110mm	M12	2
VUEBOLT110150	110 – 150mm	M12	2
VUEBOLT150230	150 – 230mm	M16	2

VTX50	VUEBOLT 50 Star Drive Wrench	2

Bellevue Group Australasia are continuously working to develop and improve our product range.
We reserve the right to change specifications, etc. without notice. For our full disclaimer, refer to page 2.

VUETRADE for the builder

INSTALLATION GUIDE

VUEBOLTs can be used in a wide range of applications where fastening between two members is required. For this document, an installation guide will be focused primarily on the usage of the VUEBOLT on a standard T-Blade Post Support.

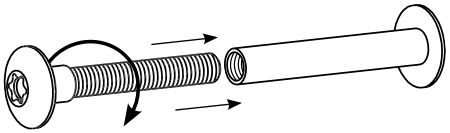

VUEBOLT - T-BLADE POST SUPPORT

Select a suitable bolt size for the application. Refer to Table 47 above for recommended working width and select the suitable size.

Install the FEMALE part of the VUEBOLT first and hold with one of the T50 star drive wrenches.

(The required T50 wrenches are available from VUETRADE in a twin pack, as a separate product of the VUEBOLT system).

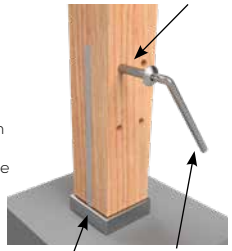

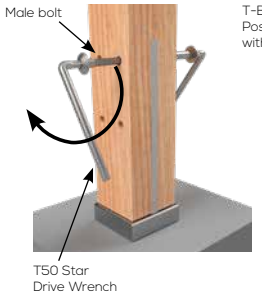

On the opposite face, install the MALE part of the VUEBOLT, and fasten and tighten into the female bolt with the second T50 star drive wrench.

IMPORTANT: The bolts MUST be used in the designated size range, i.e. VUEBOLT 90110 must be used in working width of 90mm to 110mm. This is to ensure that there will be sufficient amount of thread between the male and female bolts to meet the minimum working strength.

VUEBOLT shall be installed such that the female bolts are always installed on the thickest member of the joint to minimise effect of stress concentration on VEUBOLT leading to shear failure.

DESIGN SPECIFICATION

VUEBOLT is designed carefully to meet the requirements of the following Australian Standards and ISO standards:

ISO 898-1 & AS1111.1:2015	-	Mechanical properties and material specification
AS1684.2:2021 / AS1684.3:2021	-	Corrosion protection requirements
ISO 724	-	Metric thread dimensions
ISO 4042:2018	-	Electroplating specification of Zinc-Nickel alloy
ISO 10664	-	Design criteria of 6 shaped hexalobular driving head
AS4100:2020	-	Bolt strength limit state

DESIGN CAPACITIES (PERFORMANCE-BASED CAPACITIES)

As the VUEBOLT is a unique bolt that behaves differently from a conventional hex head bolt, the design capacities designated for the VUEBOLT are treated as performance-based, obtained from lab testing results conducted in-house by VUETRADE following testing requirements outlined by ISO 898-1 *Mechanical properties of fasteners made of carbon steel and alloy steel, Part 1: Bolts, screws and studs with specified property classes – Coarse thread and fine pitch thread.*

Table 48: VUEBOLT Design Capacities

Product	Working Bolt diameter	Tensile Strength, (kN)	Shear Strength (kN)
VUEBOLT 90 – 110	M10	18.4	19.4
VUEBOLT 90 - 110 HD	M12	16.2	21.5
VUEBOLT 110 - 150	M12	16.2	21.5
VUEBOLT 150 - 230	M16	25.9	33.7

NOTES:

1. A mechanical properties comparison between VUEBOLTs and standard hex bolts should not be compared as VUEBOLTs behave as a 2-parts system consisting of a female and male bolt screwed together. Mechanical properties of VUEBOLTs specified in this document should be consulted.
2. Technical data of VUEBOLTs may subject to constant updates on mechanical properties and corrosion protection rating.

CORROSION PROTECTION

VUEBOLT is corrosion protected with zinc electro-galvanizing to meet the requirements set out by AS1111.1:2015 / ISO 898-1.

VUEBOLT meets and exceeds the corrosion protection requirements outlined in AS1684.2:2021 – *Residential timber-framed construction*, Clause 1.15.

VUETRADE Timber Connectors is a division of **Bellevue Group Australasia**
technical@bellevuegroup.com.au **1300 850 520** www.vuetrade.com

VUETRADE for the builder

STAINLESS STEEL VUEBOLT

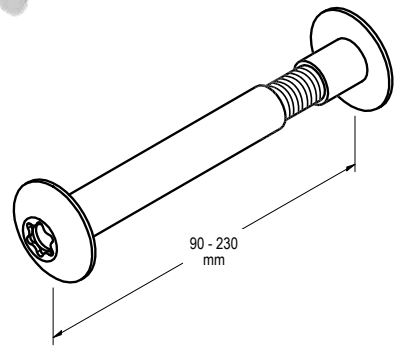

APPLICATION

VUEBOLT features a male and female bolt working together as a complete system, providing a quick, neat and concealed finish. Upon installation, the concealed feature leaves an unobstructed finish on both end of post supports or timber.

The VUEBOLT serves as an alternative to:

- Cup Head Bolts
- Hex Head Bolts
- Coach Bolts
- Star Drive Bolts;

and is quick and easy to install using the T50 Wrenches as part of the VUEBOLT system.

SPECIFICATION

VUEBOLTs are manufactured from high quality carbon steel in accordance to Australian Standard AS1111.1:2015 / ISO 898-1 (same standard of property class 4.6)

As the VUEBOLT features a two-part system (male and female bolt), it is designed and tested to conform to the mechanical properties of a range of metric hexagon bolts of a similar size. Further details on the mechanical strength of the VUEBOLT will be specified in following section of technical data.

SIZES

Table 49: Available Stainless Steel VUEBOLT sizes

Product Code	Working length (mm)	Diameter (mm)	Pack Qty
VUEBOLT90110SS	90 – 110mm	M10	2
VUEBOLT90110HDSS	90 – 110mm	M12	2
VUEBOLT110150SS	110 – 150mm	M12	2
VUEBOLT150230SS	150 – 230mm	M16	2

VTX50	VUEBOLT 50 Star Drive Wrench	2

Bellevue Group Australasia are continuously working to develop and improve our product range.
We reserve the right to change specifications, etc. without notice. For our full disclaimer, refer to page 2.

VUETRADE for the builder

INSTALLATION GUIDE

VUEBOLTs can be used in a wide range of applications where fastening between two members is required. For this document, an installation guide will be focused primarily on the usage of the VUEBOLT on a standard Full Stirrup Post Support.

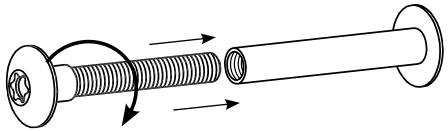

VUEBOLT - FULL STIRRUP POST SUPPORT

Select a suitable bolt size for the application. Refer to Table 49 above for recommended working width and select the suitable size.

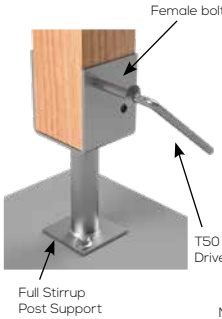

Install the FEMALE part of the VUEBOLT first and hold with one of the T50 star drive wrenches.

(The required T50 wrenches are available from VUETRADE in a twin pack, as a separate product of the VUEBOLT system).

On the opposite face, install the MALE part of the VUEBOLT, and fasten and tighten into the female bolt with the second T50 star drive wrench.

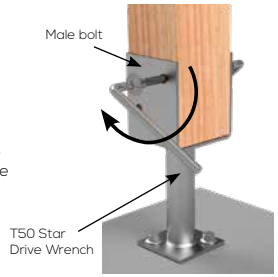

IMPORTANT: The bolts MUST be used in the designated size range, i.e. VUEBOLT 90110 must be used in working width of 90mm to 110mm. This is to ensure that there will be sufficient amount of thread between the male and female bolts to meet the minimum working strength.

VUEBOLT shall be installed such that the female bolts are always installed on the thickest member of the joint to minimise effect of stress concentration on VEUBOLT leading to shear failure.

DESIGN SPECIFICATION

VUEBOLT is designed carefully to meet the requirements of the following Australian Standards and ISO standards:

ISO 898-1 & AS1111.1:2015	-	Mechanical properties and material specification
AS1684.2:2021 / AS1684.3:2021	-	Corrosion protection requirements
ISO 724	-	Metric thread dimensions
ISO 4042:2018	-	Electroplating specification of Zinc-Nickel alloy
ISO 10664	-	Design criteria of 6 shaped hexalobular driving head
AS4100:2020	-	Bolt strength limit state

DESIGN CAPACITIES (PERFORMANCE-BASED CAPACITIES)

As the VUEBOLT is a unique bolt that behaves differently from a conventional hex head bolt, the design capacities designated for the VUEBOLT are treated as performance-based, obtained from lab testing results conducted in-house by VUETRADE following testing requirements outlined by ISO 898-1 *Mechanical properties of fasteners made of carbon steel and alloy steel, Part 1: Bolts, screws and studs with specified property classes – Coarse thread and fine pitch thread.*

Table 50: Stainless Steel VUEBOLT Design Capacities

Product	Working Bolt diameter	Tensile Strength, (kN)	Shear Strength (kN)
VUEBOLT 90 – 110	M10	18.4	19.4
VUEBOLT 90 - 110 HD	M12	16.2	21.5
VUEBOLT 110 - 150	M12	16.2	21.5
VUEBOLT 150 - 230	M16	25.9	33.7

NOTES:

1. A mechanical properties comparison between VUEBOLTs and standard hex bolts should not be compared as VUEBOLTs behave as a 2-parts system consisting of a female and male bolt screwed together. Mechanical properties of VUEBOLTs specified in this document should be consulted.
2. Technical data of VUEBOLTs may subject to constant updates on mechanical properties and corrosion protection rating.

CORROSION PROTECTION

VUEBOLT is corrosion protected with Stainless Steel 316 to meet the requirements set out by AS1111.1:2015 / ISO 898-1.

VUEBOLT meets and exceeds the corrosion protection requirements outlined in AS1684.2:2021 – *Residential timber-framed construction*, Clause 1.15.

VUETRADE for the builder

VUEBRACE STAINLESS STEEL PUNCHED BUILDER'S STRAPPING

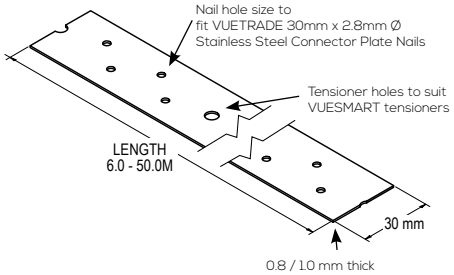

APPLICATION

VUEBRACE Stainless Steel Builder's Strapping is commonly used for cross-bracing wall panels, roof trusses and flooring members while requiring a much higher corrosion protection.

SPECIFICATION

VUEBRACE Stainless Steel Builder's Strapping is manufactured using 316 Stainless Steel, fully compliant to material and corrosion protection requirements stipulated in AS1684.2:2021, AS1684.3:2021 and AS1684.4-2010.

For further information about this products net sectional area compliance see Page 133.

FASTENERS

Nails: Use only VUETRADE 30mm x 2.8mm Ø Stainless Steel Connector Plate Nails

Usage of galvanised nails with Stainless Steel Builder's Strapping may result in bimetallic corrosion which will reduce the strapping design capacity.

SIZES

Product Code	Size (mm)	Roll length (m)
VB30815SS	30 x 0.8	15
VB30830SS	30 x 0.8	30
VB30115SS	30 x 1.0	15
VB30130SS	30 x 1.0	30

METAL STRAPS – TENSIONED

(Bracing Capacity of 1.5kN/m),
Table 8.18 (b) from AS1684.2:2021 / AS1684.3:2021,
as well as AS1684.4-2010 Table 8.3(b)

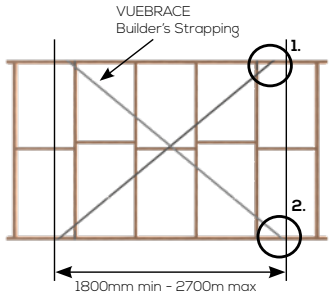

See Detail A for fixing schedule

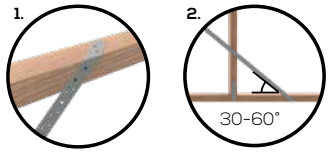

Table 51: Bracing capacity (kN) for different bracing length (m)

Wall height (m)	Bracing Length (m)									
	1.8	1.9	2.0	2.1	2.2	2.3	2.4	2.5	2.6	2.7
2.7	2.7	2.9	3.0	3.2	3.3	3.5	3.6	3.8	3.9	4.1
3.0	2.4	2.6	2.7	2.8	3.0	3.1	3.2	3.4	3.5	3.6

FIXING DETAILS A

WRAP OVER OR FACE FIXED

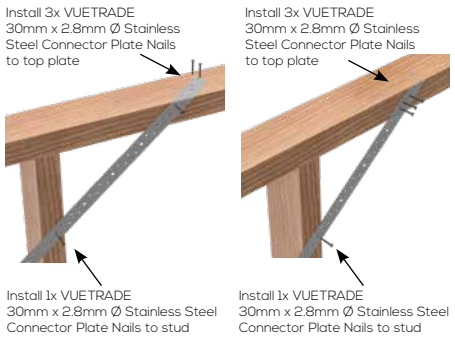

Bellevue Group Australasia are continuously working to develop and improve our product range.
We reserve the right to change specifications, etc. without notice. For our full disclaimer, refer to page 2.

VUETRADE for the builder

Timber Connectors
Compliance Data

METAL STRAPS – TENSIONED – WITH STUD STRAPS

(Bracing Capacity of 3.0kN/m),
Table 8.18(d) from AS1684.2:2021 / AS1684.3:2021,
as well as AS1684.4-2010 Table 8.3(d)

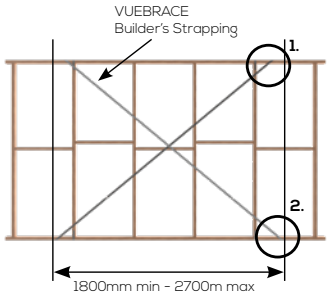

See Detail B for fixing schedule

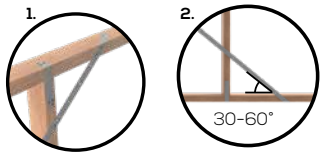

Table 52: Bracing capacity (kN) for different bracing length (m)

Wall height (m)	Bracing Length (m)									
	1.8	1.9	2.0	2.1	2.2	2.3	2.4	2.5	2.6	2.7
2.7	5.4	5.7	6.0	6.3	6.6	6.9	7.2	7.5	7.8	8.1
3.0	4.9	5.1	5.4	5.7	5.9	6.2	6.5	6.8	7.0	7.3

FIXING DETAILS B

WRAP OVER

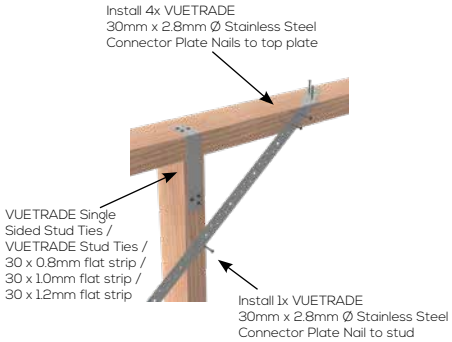

BRACING CAPACITY AND HEIGHT MODIFICATION

Values shown in Table 51 & Table 52 above are valid for the wall heights stated. For wall heights greater than 2.7m, the capacity should be multiplied by values in Table 53.

Table 53: Bracing wall capacity / height multiplier

Bracing Wall Capacity / Height Multiplier	
Wall Height, mm	**Multiplier**
3 000	0.90
3 300	0.80
3 600	0.75
3 900	0.70
4 200	0.64

DESIGN CAPACITY DATA

Table 54: Tensile capacities of Stainless Steel Builder's Strapping

Brace Dimensions (Width x Thickness)	Tension Capacities (kN)
30mm x 0.8mm	9.4
30mm x 1.0mm	11.7

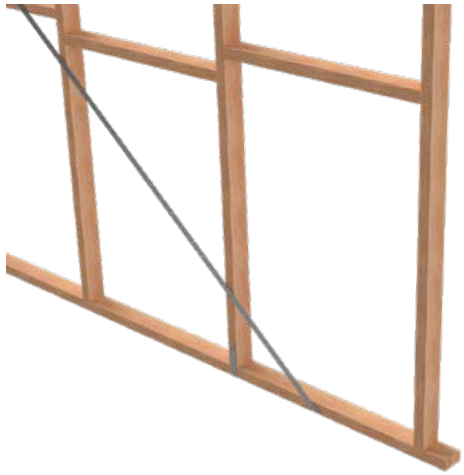

VUETRADE for the builder

STAINLESS STEEL JOIST HANGERS

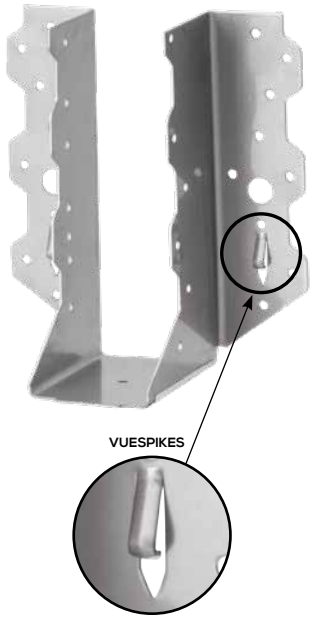

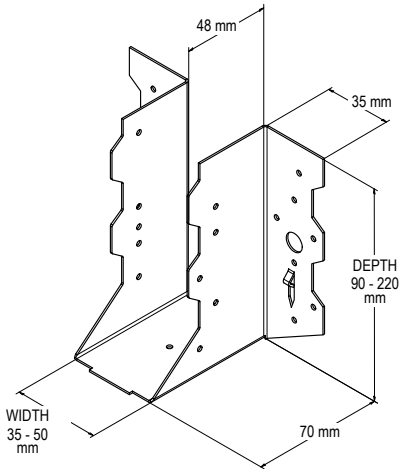

APPLICATION

VUETRADE Stainless Steel Joist Hangers are a fast fixing, multi-purpose hangers for connecting joists to beams, trusses to beams and roof trusses to girders. The Joist Hangers are manufactured with VUESPIKES for easy and fast installation.

SPECIFICATION

VUETRADE Stainless Steel Joist Hangers are manufactured from 316 Stainless Steel in 1.0 mm thickness (TCT).

FASTENERS

Nails: Use only VUETRADE 30mm x 2.8mm Ø Stainless Steel Connector Plate Nails

SIZES

Table 55: Stainless Steel Joist Hanger sizes

Product Code	Nominal Size (mm)	Box Qty
VJH3590SS	35 x 90	45
VJH35120SS	35 x 120	30
VJH35140SS	35 x 140	30
VJH35180SS	35 x 180	30
VJH4590SS	45 x 90	45
VJH45120SS	45 x 120	30
VJH45140SS	45 x 140	30
VJH45180SS	45 x 180	30
VJH45220SS	45 x 220	20
VJH5090SS	50 x 90	45
VJH50120SS	50 x 120	30
VJH50140SS	50 x 140	30
VJH50180SS	50 x 180	30
VJH50220SS	50 x 220	20

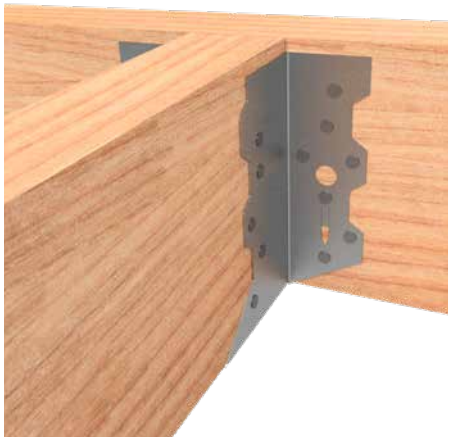

Bellevue Group Australasia are continuously working to develop and improve our product range.
We reserve the right to change specifications, etc. without notice. For our full disclaimer, refer to page 2.

VUETRADE for the builder

INSTALLATION GUIDE

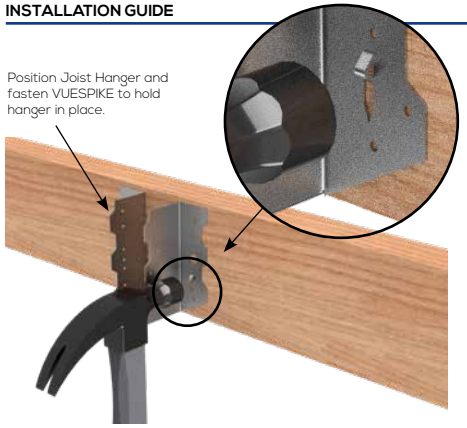

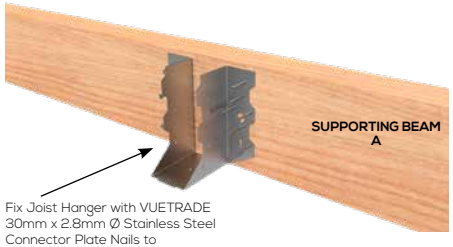

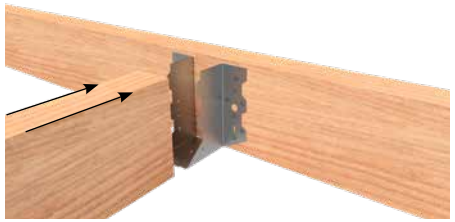

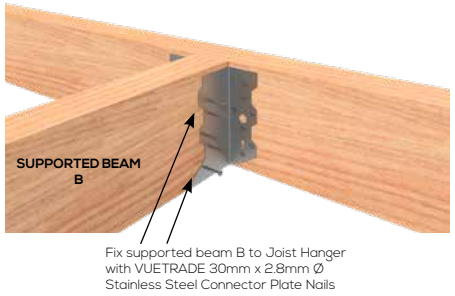

1. Suitable size Joist Hanger shall be selected using Table 55, ensuring sufficient hanger depth is provided for different joist / beam sizes.
2. Joist Hanger should be fixed to the supporting member first. It can be quickly and easily held in place by VUESPIKES before fastening hanger with nails.
3. Fix VUETRADE 30mm x 2.8mm Ø Stainless Steel Connector Plate Nails through Joist Hanger to supporting beam, using the recommended number of nails in Table 56.
4. Install supported beam (usually floor beams / joists) to hangers and fasten supported beams with VUETRADE 30mm x 2.8mm Ø Stainless Steel Connector Plate Nails, using recommended number of nails listed in Table 56.
5. Installation of bolts on Joist Hangers is permitted. Please contact VUETRADE for more information for risks and considerations along with installation guide and design capacities.
6. Usage of galvanised nails with Stainless Steel Joist Hangers may result in bimetallic corrosion which will reduce the joist design capacity.

VUETRADE for the builder

DESIGN CAPACITY DATA

Table 56: Design Capacity data for nail fixing of Stainless Steel Joist Hanger

Sizes	Number of Nails		Type of load	Joint Group					
	Fixing on supporting Beam A	Fixing on supported Beam B		J3	J4	J5	JD3	JD4	JD5
90mm	10	8	Dead Load	3.9	2.7	2.1	5.4	3.9	3.2
			Dead Load + Floor Live Load	4.7	3.3	2.5	6.5	4.7	3.8
			Dead Load + Roof Live Load	5.2	3.7	2.8	7.3	5.2	4.3
			Dead Load + Wind Load	6.2	4.4	3.3	8.7	6.2	5.1
120mm	14	10	Dead Load	4.8	3.4	2.5	7.1	5.0	4.1
			Dead Load + Floor Live Load	5.8	4.1	3.1	8.5	6.1	5.0
			Dead Load + Roof Live Load	6.4	4.5	3.4	9.5	6.8	5.6
			Dead Load + Wind Load	7.7	5.5	4.1	10.8	7.7	6.3
140mm	18	12	Dead Load	5.8	4.1	3.1	8.9	6.4	5.2
			Dead Load + Floor Live Load	7.1	5.0	3.8	10.8	7.7	6.3
			Dead Load + Roof Live Load	7.9	5.6	4.2	12.0	8.6	7.1
			Dead Load + Wind Load	8.6	6.1	4.6	11.4	8.2	6.7
180mm	22	14	Dead Load	6.8	4.8	3.6	10.7	7.7	6.3
			Dead Load + Floor Live Load	8.2	5.8	4.4	13.0	9.3	7.6
			Dead Load + Roof Live Load	9.2	6.5	4.9	14.5	10.3	8.5
			Dead Load + Wind Load	9.1	6.4	4.9	13.9	9.9	8.1
220mm	26	18	Dead Load	7.9	5.6	4.2	12.4	8.9	7.3
			Dead Load + Floor Live Load	9.6	6.8	5.1	15.1	10.8	8.8
			Dead Load + Roof Live Load	10.7	7.5	5.7	16.8	12.0	9.8
			Dead Load + Wind Load	12.6	8.9	6.7	16.0	11.4	9.4

NOTES:

- Modification factors k1 for different load cases in the design capacities of Table 56 are adopted from AS1720.1-2010.
- Design capacities in Table 56 are based on Category 1 joints where it is applicable for failures that would be unlikely to affect an area of greater than 25m2. For Category 2 and Category 3 joints, design capacities from the table are multiplied by 0.941 and 0.882 respectively.
- NEVER punch nails through sheet metal as it results in weaker, non-compliant connections.

STAINLESS STEEL SPLIT JOIST HANGERS

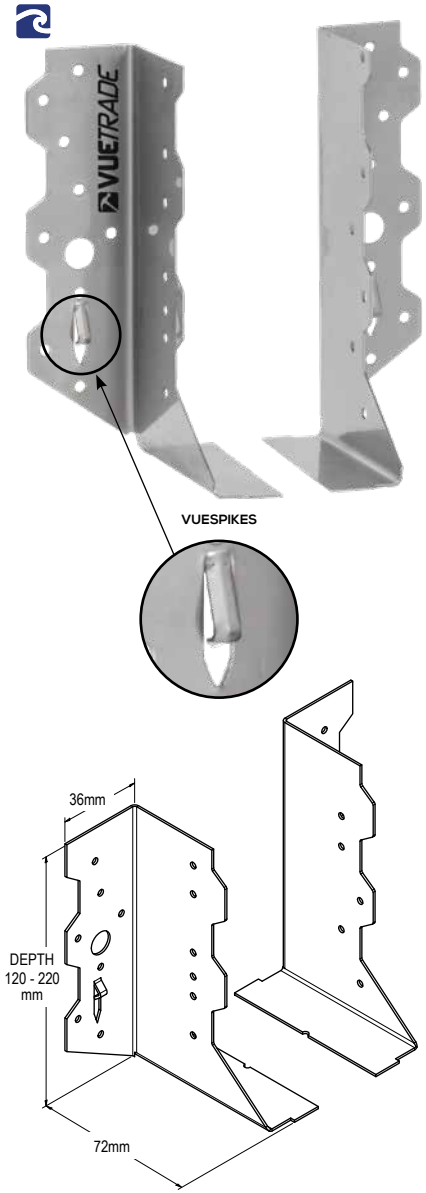

APPLICATION

Stainless Steel Split Joist Hangers are fast fixing, multi-purpose hangers ideal for joist, beam and truss joining in coastal areas, with timber over the width of 50mm, to be installed as a pair.

SPECIFICATION

VUETRADE Stainless Steel Split Joist Hangers are Australian Made, manufactured from 316 Stainless Steel.

FASTENERS

Nails: Use only VUETRADE 30mm x 2.8mm Ø Stainless Steel Connector Plate Nails.

SIZES

Table 57: Stainless Steel Split Joist Hanger

Product Code	Size (mm)	Box Qty
VSJH120SS	120	30 pairs
VSJH140SS	140	30 pairs
VSJH180SS	180	30 pairs
VSJH220SS	220	20 pairs

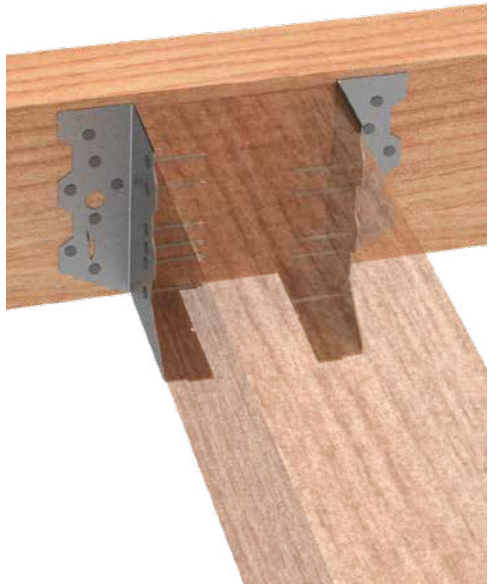

INSTALLATION GUIDE

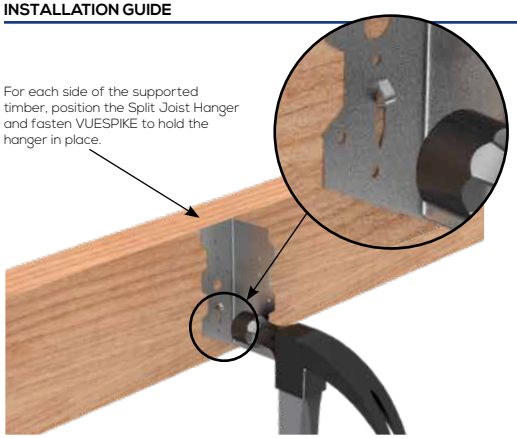

1. Suitable size Split Joist Hanger shall be selected using Table 57, ensuring sufficient hanger depth is provided for different joist / beam sizes.
2. Both sides of the Split Joist Hanger should be fixed to the supporting member first. It can be quickly and easily held in place by VUESPIKES before fastening hanger with nails.
3. Fix VUETRADE 30mm x 2.8mm Ø Stainless Steel Connector Plate Nails through Split Joist Hanger to supporting beam, using the recommended number of nails in Table 58.
4. Install supported beam (usually floor beams / joists) to hangers and fasten supported beams with VUETRADE 30mm x 2.8mm Ø Stainless Steel Connector Plate Nails, using recommended number of nails listed in Table 58.
5. Usage of galvanised nails with Stainless Steel Split Joist Hangers may result in bimetallic corrosion which will reduce the joist design capacity.

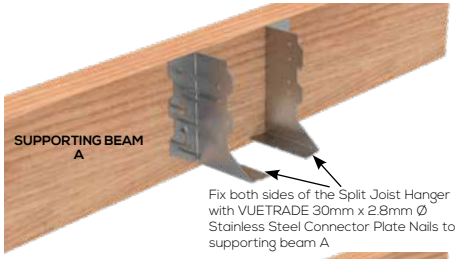

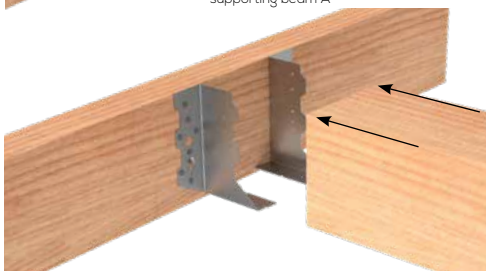

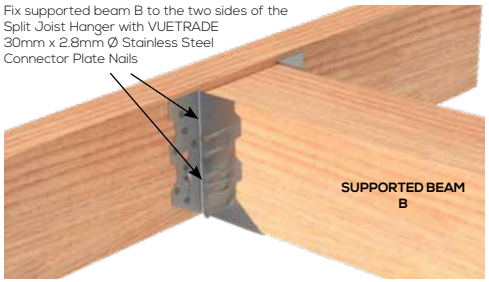

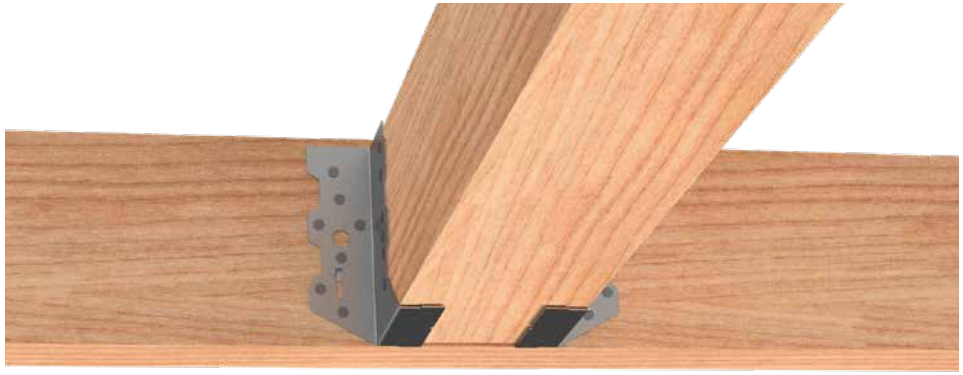

DESIGN CAPACITY DATA

Table 58: Design capacity data for nail fixing of Stainless Steel Split Joist Hanger [used in pairs]

Sizes	Number of Nails		Type of load	Joint Group					
	Fixing on supporting Beam A	Fixing on supported Beam B		J3	J4	J5	JD3	JD4	JD5
120mm	14 (7 on each side)	11 (6 on left, 5 on right)	Dead Load	4.0	2.8	2.1	5.6	4.0	3.3
			Dead Load + Floor Live Load	4.8	3.4	2.6	6.3	4.8	4.0
			Dead Load + Roof Live Load	5.4	3.8	2.9	7.6	5.4	4.4
			Dead Load + Wind Load	8.0	5.7	4.3	11.2	8.0	6.6
140mm	18 (9 on each side)	13 (7 on left, 6 on right)	Dead Load	4.7	3.3	2.5	6.6	4.7	3.8
			Dead Load + Floor Live Load	5.7	4.0	3.0	7.9	5.7	4.6
			Dead Load + Roof Live Load	6.3	4.5	3.4	8.8	6.3	5.2
			Dead Load + Wind Load	9.4	6.6	5.0	13.1	9.4	7.7
180mm	22 (11 on each side)	15 (8 on left, 7 on right)	Dead Load	5.4	3.8	2.9	7.5	5.4	4.4
			Dead Load + Floor Live Load	6.5	4.6	3.5	9.1	6.5	5.3
			Dead Load + Roof Live Load	7.2	5.1	3.9	10.1	7.2	5.9
			Dead Load + Wind Load	10.7	7.6	5.7	15.0	10.7	8.8
220mm	26 (13 on each side)	17 (9 on left, 8 on right)	Dead Load	6.0	4.3	3.2	8.4	6.0	4.9
			Dead Load + Floor Live Load	7.3	5.2	3.9	10.2	7.3	6.0
			Dead Load + Roof Live Load	8.1	5.7	4.3	11.4	8.1	6.7
			Dead Load + Wind Load	12.0	8.5	6.4	15.8	12.0	9.9

NOTES:

1. Design capacities in Table 58 are for VUETRADE 30mm x 2.8mm Ø Stainless Steel Connector Plate Nails only. Design capacities are determined based on the number of nails in each Split Joist Hanger.
2. Modification factors k1 for different load cases are adopted from AS1720.1-2010.
3. Design capacities in the Table 58 are based on Category 1 joints where it is applicable for failures that would be unlikely to affect an area of greater than 25m2. For Category 2 and Category 3 joints, design capacities from the table are multiplied by 0.941 and 0.882 respectively.
4. NEVER punch nails through sheet metal as it results in weaker, non-compliant connections.
5. Stainless Steel Split Joist Hanger capacities are capped at 15.8kN for steel failure.

VUETRADE for the builder

STAINLESS STEEL TRIPLE GRIPS

VTTGLHSS

VTTGRHSS

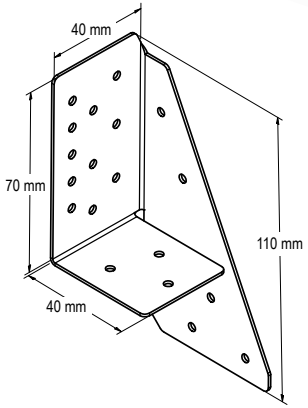

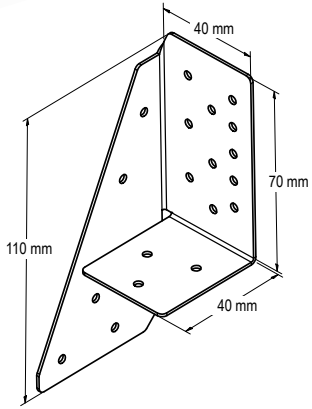

APPLICATION

Stainless Steel Triple Grips are multipurpose building brackets used in many nail-fixed timber joints with perpendicular angles, ideal for use on the coast.

SPECIFICATION

VUETRADE Stainless Steel Triple Grips are manufactured from 316 Stainless Steel in 1.0mm thickness.

FASTENERS

Nails: Use only VUETRADE 30mm x 2.8mm Ø Stainless Steel Connector Plate Nails

Recommended numbers of nails per bracket / joint are showed in the next section.

Note: Triple grips shall be hand driven, usage of nail guns and machine-driven nails is strictly NOT recommended.

SIZES

Product Code	Description	Box Qty
VTTGLHSS	Left Hand	100
VTTGRHSS	Right Hand	100

VUETRADE for the builder

INSTALLATION GUIDE

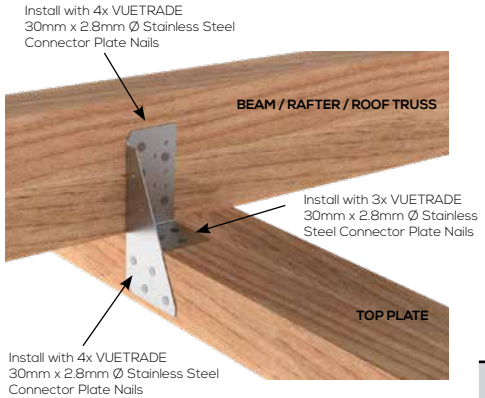

1. Use only VUETRADE 30mm x 2.8mm Ø Stainless Steel Connector Plate Nails when installing Stainless Steel Triple Grip.
2. Install nails through designated holes, do not drive nails through sheet material.
3. Usage of galvanised nails with Stainless Steel Triple Grips may result in bimetallic corrosion which will reduce the grip design capacity.

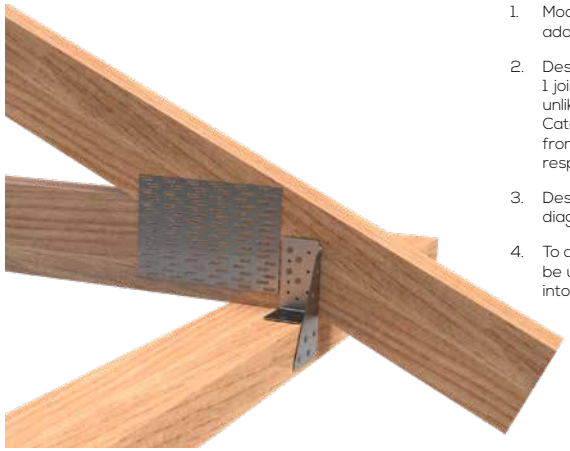

DESIGN CAPACITY DATA

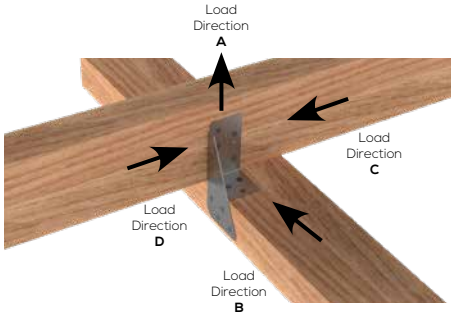

Table 59: Design capacities for dead loads

Load Directions	Design Capacity for Timber Joint Groups, kN					
	J3	J4	J5	JD3	JD4	JD5
A	1.5	1.1	0.8	2.2	1.5	1.3
B	2.7	1.9	1.4	3.8	2.7	2.2
C/D	1.5	1.1	0.8	2.2	1.5	1.3

Table 60: Design Capacity for wind uplifts:

Load Directions	Design Capacity for Timber Joint Groups, kN					
	J3	J4	J5	JD3	JD4	JD5
A	3.1	2.2	1.7	4.3	3.1	2.5
B	5.4	3.8	2.9	7.6	5.4	4.4
C/D	3.1	2.2	1.7	4.3	3.1	2.5

NOTES:

1. Modification factors k1 for different load cases are adopted from AS1720.1-2010.
2. Design capacities in the tables are based on Category 1 joints where it is applicable for failures that would be unlikely to affect an area of greater than 25m2. For Category 2 and Category 3 joints, design capacities from the table are multiplied by 0.941 and 0.882 respectively.
3. Design capacity for different load directions is shown in diagram above
4. To achieve greater design capacity, two Triple Grips may be used for a connection or more nails may be installed into the pre-bored holes.

VUETRADE for the builder

STAINLESS STEEL MULTI GRIPS

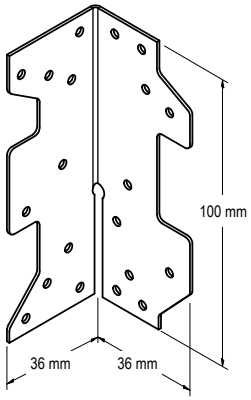

APPLICATION

VUETRADE Stainless Steel Multi Grips are general purpose timber framing brackets used for joining timber members at right angles. These brackets can be used on pergolas, timber rails, fences and general joinery fit-out.

SPECIFICATION

VUETRADE Stainless Steel Multi Grips are manufactured from 316 Stainless Steel in 1.0mm thickness.

FASTENERS

Nails: Use only VUETRADE 30mm x 2.8mm Ø Stainless Steel Connector Plate Nails

SIZES

Product Code	Length (mm)	Box Qty
VTMG100SS	100	200

INSTALLATION GUIDE

LOADING TYPE A (used as a pair)

LOADING TYPE B

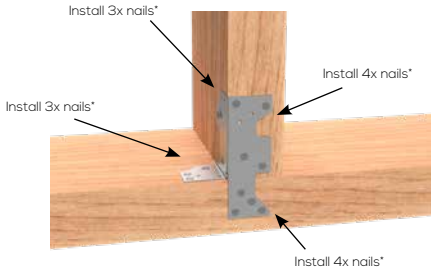

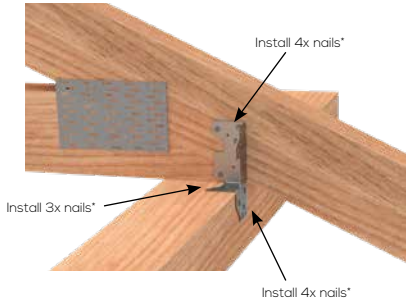

* Use only VUETRADE 30mm x 2.8mm Ø Stainless Steel Connector Plate Nails.

VUETRADE for the builder

DESIGN CAPACITY DATA

Load ratings stated below are for when installed as a pair.

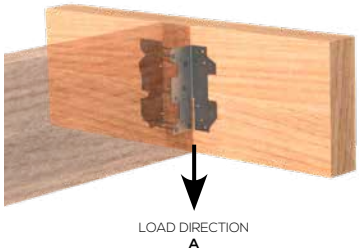

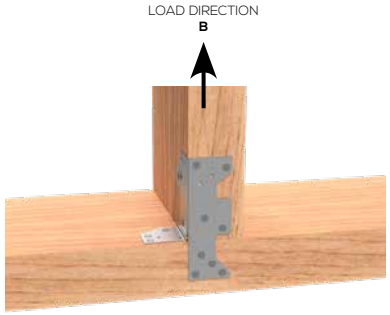

Table 61: Multi Grip Design Capacity Table – Load Direction A (capacity is for a pair of Multi Grip)

Load Directions	Design Capacity for Timber Joint Groups, kN					
	J3	J4	J5	JD3	JD4	JD5
Dead Load, 1.35G	3.6	2.6	1.9	5.0	3.6	3.0
Dead & Roof Live Loads, 1.2G+1.5Qr	4.4	3.1	2.3	6.2	4.4	3.6
Wind Uplift	7.3	5.1	3.9	10.2	7.3	6.0

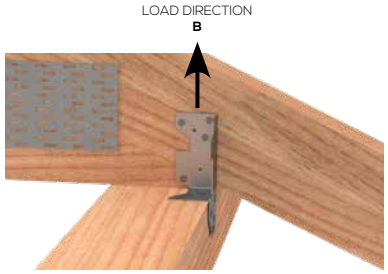

Table 62: Multi Grip Design Capacity Table – Load Direction B

Load Directions	Design Capacity for Timber Joint Groups, kN					
	J3	J4	J5	JD3	JD4	JD5
Wind Uplift	3.1	2.2	1.7	4.3	3.1	2.5

NOTES:

1. Design capacities in Table 61 and Table 62 apply to all sizes of VUETRADE Stainless Steel Multi Grips, minimum recommended nail fixings are detailed in the fixing guide section.
2. To achieve greater design capacity, more nails may be installed into the pre-bored holes. NEVER punch nails through sheet metal as it may result in weaker, non-compliant connections.
3. Capacity for load direction B can be doubled up with double the amount of Multi Grips used.
4. Design capacities in Table 61 and Table 62 are based on Category 1 joints where it is applicable for failures that would be unlikely to affect an area of greater than 25m2. For Category 2 and Category 3 joints, design capacities from the table are multiplied by 0.941 and 0.882 respectively.

VUETRADE for the builder

STAINLESS STEEL MINI GRIPS

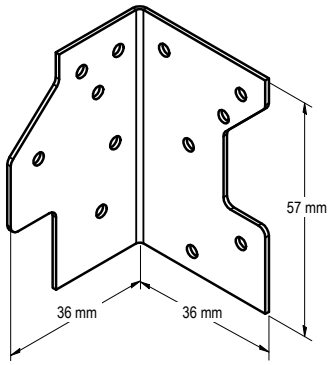

APPLICATION

VUETRADE Stainless Steel Mini Grips are general purpose timber framing brackets used for joining timber members at right angles. These brackets can be used on pergolas, timber rails, fences and general joinery fit-out.

SPECIFICATION

VUETRADE Stainless Steel Mini Grips are manufactured from 316 Stainless Steel in 1.0mm thickness.

FASTENERS

Nails: Use only VUETRADE 30mm x 2.8mm Ø Stainless Steel Connector Plate Nails

SIZE

Product Code	Length (mm)	Box Qty
VTMG57SS	57	200

INSTALLATION GUIDE

For each side of the supported timber:

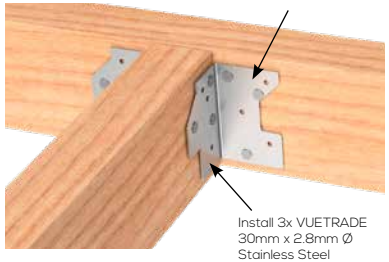

DESIGN CAPACITY DATA

Load ratings stated below are for when installed as a pair.

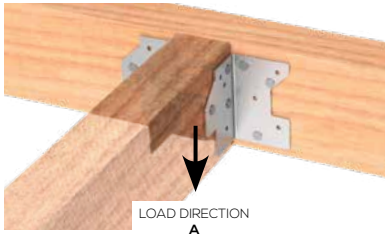

Table 63: Mini Grip Design Capacity – Load Direction A (capacity is for a pair of Mini Grips)

Load Directions	Design Capacity for Timber Joint Groups, kN					
	J3	J4	J5	JD3	JD4	JD5
Dead Load, 1.35G	2.3	1.6	1.2	3.2	2.3	1.9
Dead & Roof Live Loads, 1.2G+1.5Qr	2.8	2.0	1.5	3.9	2.8	2.3
Wind Uplift	4.6	3.3	2.5	6.5	4.6	3.8

NOTES:

1. Design capacities in Table 63 apply when the minimum recommended nail fixings are fixed, as detailed in the installation guide section.
2. To achieve greater design capacity, more nails may be installed into the pre-bored holes. NEVER punch nails through sheet metal as it may result in weaker, non-compliant connections.
3. Design capacities in Table 63 are based on Category 1 joints where it is applicable for failures that would be unlikely to affect an area of greater than 25m2. For Category 2 and Category 3 joints, design capacities from the table are multiplied by 0.941 and 0.882 respectively.

VUETRADE for the builder
Timber Connectors
Compliance Data

STAINLESS STEEL CONNECTOR PLATE NAILS

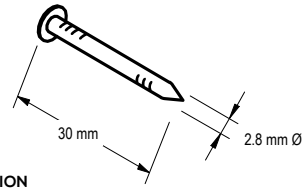

APPLICATION

VUETRADE Stainless Steel Connector Plate Nails are specially engineered and designed for VUETRADE Timber Connector Products to achieve the specified design capacity in their respective technical data sheets.

SPECIFICATION

VUETRADE Stainless Steel Connector Plate Nails are manufactured using Stainless Steel 316.

VUETRADE Stainless Steel Connector Plate Nails are suitable for all framing purposes where nail fixing is required as required by the framing code AS1684.2:2021 / AS1684.3:2021 / AS1684.4-2010.

PRODUCT RANGE

Product Code	Size (mm)	Weight	Approx. Number of Nails
VTCPNSS3028500	30 x 2.8 Ø	500 g	260
VTCPNSS30282	30 x 2.8 Ø	2 kg	1040
VTCPNSS30285	30 x 2.8 Ø	5 kg	2600

FIXING DETAILS

VUETRADE Stainless Steel Connector Plate Nails can be used with all VUETRADE Stainless Steel timber connector products where 30mm x 2.8mm Ø nail fixings are required.

Refer to individual product's Technical Data Sheet for specific fixing details.

Usage of Stainless Steel Connector Plate Nails with galvanised VUETRADE products may result in bimetallic corrosion which will reduce their design capacities.

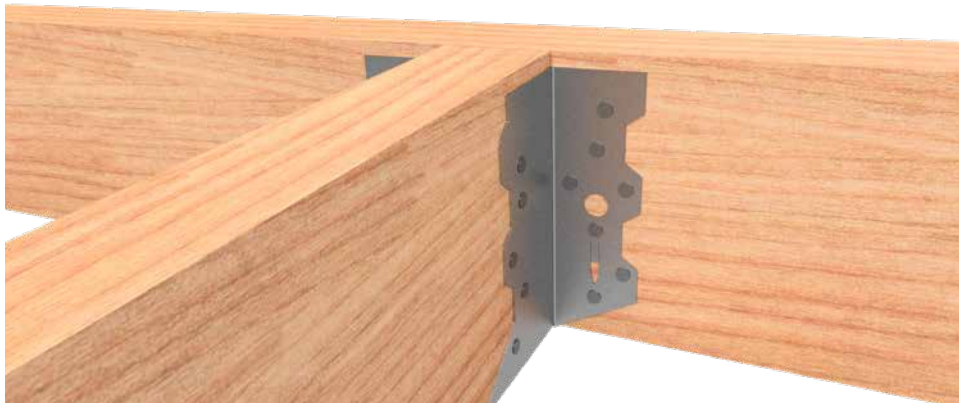

VUETRADE for the builder

STAINLESS STEEL JOIST STRAPS

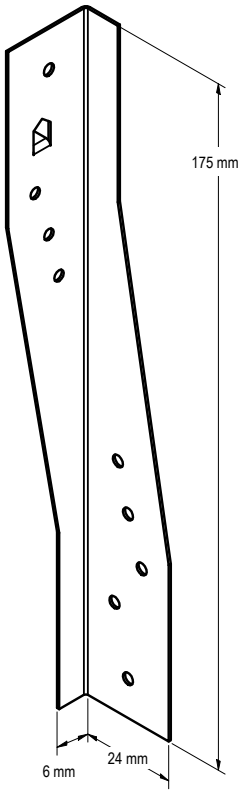

APPLICATION

VUETRADE Stainless Steel Joist Straps are simple connectors for fixing ceiling joists to hanging beams and rafters to beams at right angles, with VUESPIKEs for easy positioning before fixing.

SPECIFICATION

VUETRADE Stainless Steel Joist Straps are Australian Made and manufactured using 316 stainless steel in 0.6mm thickness.

FASTENERS

Nails: Use only VUETRADE 30mm x 2.8mm Ø Stainless Steel Connector Plate Nails

SIZE

Product Code	Size (mm)	Box Qty
VTJS150SS	175mm	150

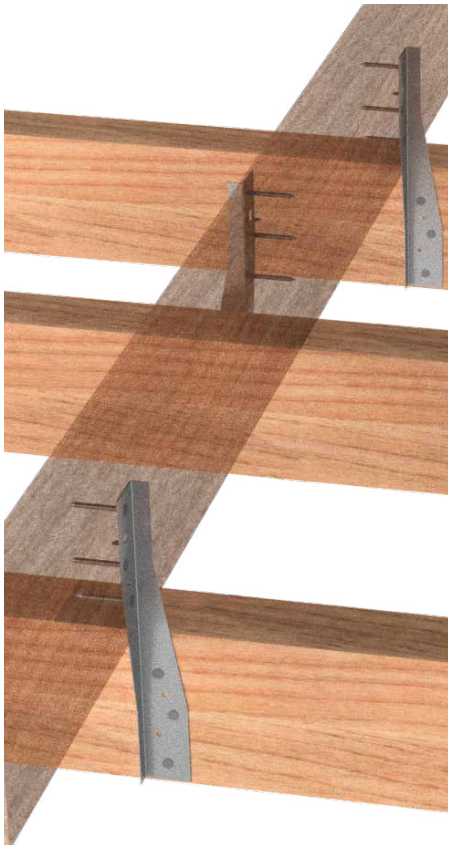

Bellevue Group Australasia are continuously working to develop and improve our product range.
We reserve the right to change specifications, etc. without notice. For our full disclaimer, refer to page 2.

VUETRADE for the builder

INSTALLATION GUIDE

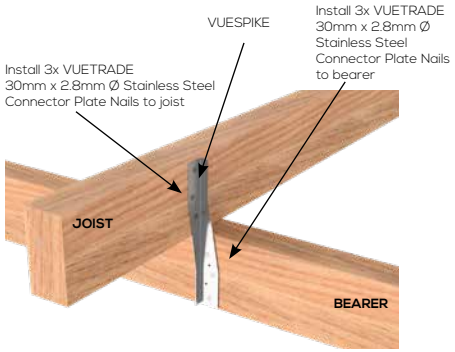

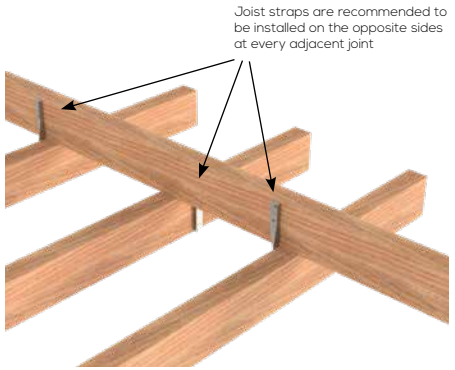

1. Position VUETRADE Stainless Steel Joist Straps and drive VUESPIKE into place for ease of positioning.
2. Drive VUETRADE 30mm x 2.8mm Ø Stainless Steel Connector Plate Nails into both timber members, using 3 nails per end.
3. Design capacity of Joist Strap will increase with more nails installed through pre-bored holes. Do not punch through sheet material as it will result in a weaker and non-compliant connection. For more information about specific design load capacities please contact VUETRADE.

DESIGN CAPACITY DATA

Table 64: Stainless Steel Joist Strap design capacity data

Load Case	Design Capacity for Timber Joint Groups, kN					
	J3	J4	J5	JD3	JD4	JD5
DL	1.2	0.8	0.6	1.6	1.2	1.0
DL + FLL	1.4	1.0	0.7	2.0	1.4	1.2
DL + RLL	1.6	1.1	0.8	2.2	1.6	1.3
Wind Uplift	2.3	1.6	1.2	3.2	2.3	1.9

NOTES:

1. Design capacities in Table 64 are based on installing 3 nails on each end of the Joist Strap using VUETRADE 30mm x 2.8mm Ø Stainless Steel Connector Plate Nails only.
2. Modification factors k1 for different load cases are adopted from AS1720.1-2010.
3. Design capacities in the Table 64 are based on Category 1 joints where it is applicable for failures that would be unlikely to affect an area of greater than 25m2. For Category 2 and Category 3 joints, design capacities from the table are multiplied by 0.941 and 0.882 respectively.

VUETRADE for the builder

STAINLESS STEEL TAP IN PLATES

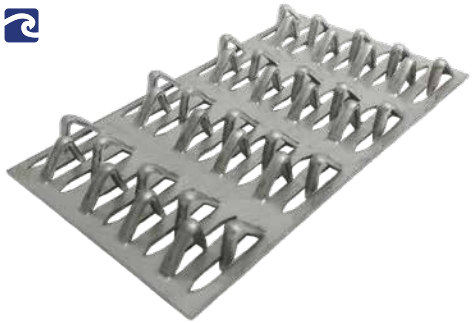

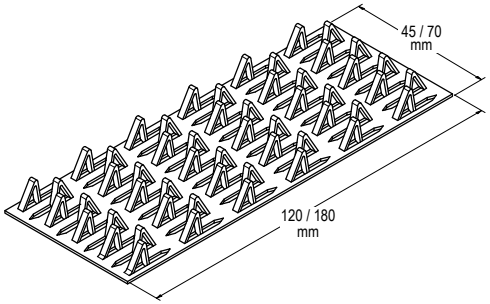

SIZES

Product Code	Size (mm)	Box Qty	No. of teeth per plate
VTIP45120SS	45 x 120	100	24
VTIP45180SS	45 x 180	67	36
VTIP70120SS	70 x 120	75	36
VTIP70180SS	70 x 180	50	54

INSTALLATION GUIDE

Install VUETRADE Tap In Plate by driving each of the teeth on the Stainless Steel Tap In Plate into the both timber joint members using a hammer. For application of butt jointing, ensure that the Tap In Plate are installed with equal length in the timber member (symmetrically) and fix one plate on each face of the timber member.

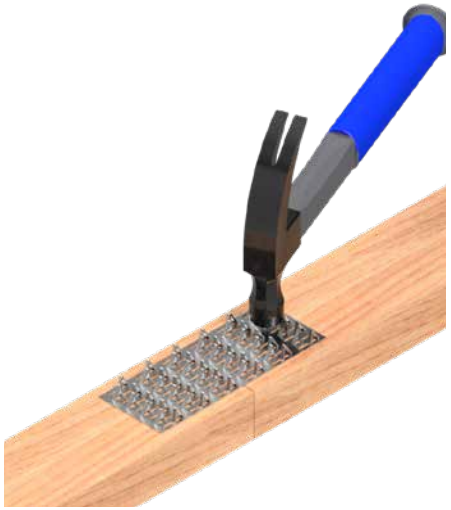

APPLICATION

VUETRADE Tap In Plates are useful for various application such as:

- Joining various timber wall frames and top plates together;
- Use in manufacturing trusses;
- Joining ends of timber;
- Timber ends repair.

SPECIFICATION

VUETRADE Stainless Steel Tap In Plates are manufactured in 1.2mm stainless steel 316 to a wide range of sizes to suit different sizes of timber and applications.

Stainless Steel 316 has a better corrosion resistance property compared to Stainless Steel 304. The typical material composition contains 2% molybdenum that is not present in SS304, which provides superior corrosion protection compared to SS304. SS316 is suitable for environment with higher risk of corrosion attack, for example sea water and brine solution.

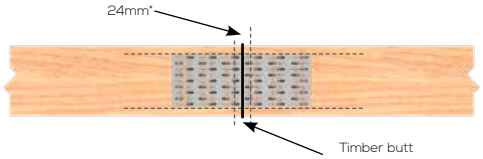

* No nails should be driven within 12mm from timber butt end or within 6mm to the timber edge to reduce risk of timber splitting.

DESIGN CAPACITY DATA

The method of obtaining design capacities for VUETRADE Stainless Steel Tap In Plates was derived based on the test methodestablishedfromAustralianStandardAS1649-2001- *Timber - Methods of test for mechanical fasteners and connectors - Basic working loads and characteristic strengths.* The loads of standard timber joint groups shown in this document are defined based on the Australian Standard AS1720.1-2010 - *Timber structures, Part 1: Design methods.* Refer to VUETRADE's Timber Properties Technical Data for the classification of joint groups for various timber species.

Table 65: Design capacities of Stainless Steel Tap In Plates

Design Load Capacity (N/tooth) for Timber Joint Group: JD4		
Load Direction	**Perpendicular**	**Parallel**
Dead Load	125	127
Dead Load + Roof Live Load	169	172
Dead Load + Wind Load	250	255

NOTES:

1. The duration factor k1 used to derive the values above are 0.57 for dead loads, 0.77 for combination of dead load and roof live load and 1.14 for combination of dead load and wind load. Modification factors k1 for different load cases are adopted from AS1720.1-2010.
2. Design capacities in the tables are based on Category 1 joints where it is applicable for failures that would be unlikely to affect an area of greater than 25m2. For Category 2 and Category 3 joints, design capacities from the table are multiplied by 0.941 and 0.882 respectively.
3. The design of timber joints as specified in the Australian Standard AS1649-2001 states that teeth driven 12mm to the butt end and 6mm to the timber edges are ineffective (refer to illustration on previous page). VUETRADE SS Tap In Plates teeth are manufactured 30mm apart which means that all teeth deliver effective loading.

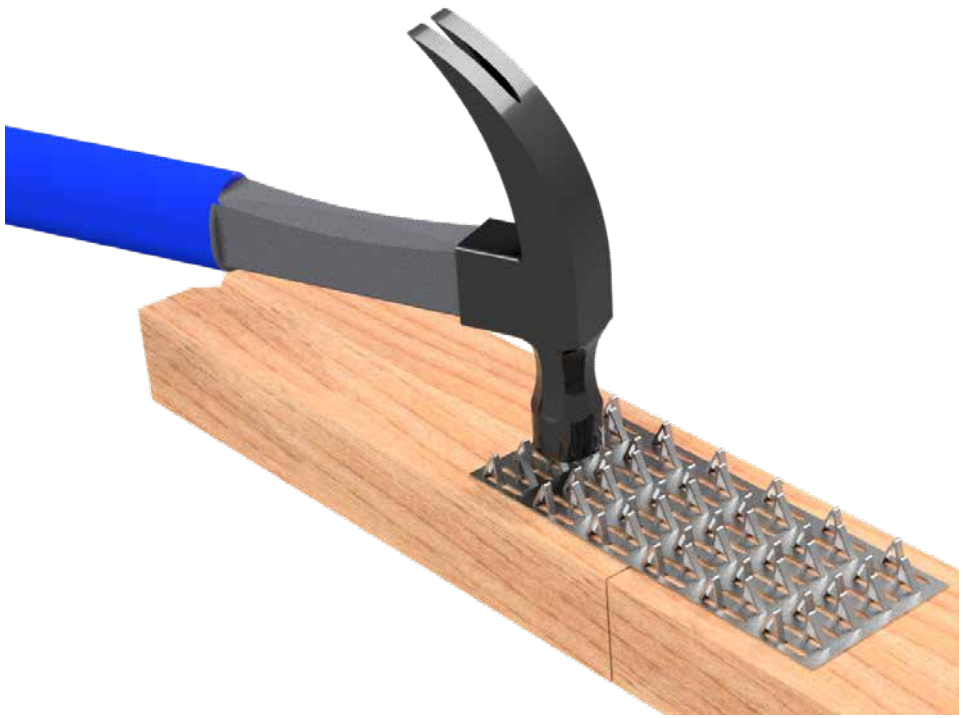

VUETRADE for the builder

STAINLESS STEEL NAIL ON BEARER PLATES

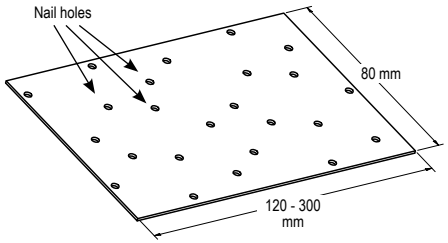

APPLICATION

VUETRADE Bearer Plates are manufactured as a flat steel plate which are then fixed with flat head nails or screws. The plates are suitable for a range of construction applications such as:

- Joining timber by butting members together (for spliced joint connection Bearer Plates must be used in pairs);
- An alternative for heavy duty connection where a tap in plate will not offer adequate strength;
- Framework repair;
- Member or joint reinforcement works.

SPECIFICATION

VUETRADE Stainless Steel Bearer Plates are manufactured with Stainless Steel 316 material in 1.0mm thickness.

FASTENERS

Nails: Use only VUETRADE 30mm x 2.8mm Ø Stainless Steel Connector Plate Nails

SIZES

Product Code	Size (mm)	Box Qty	Number of holes per plate
VTBP80120SS	80 x 120	100	24
VTBP80180SS	80 x 180	100	36
VTBP80240SS	80 x 240	50	48
VTBP80300SS	80 x 300	50	60

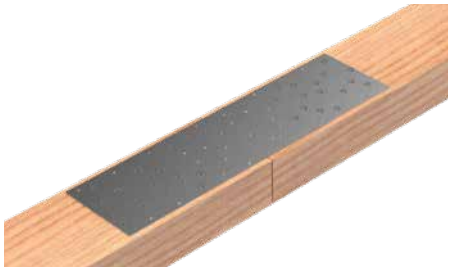

INSTALLATION GUIDE

1. Install VUETRADE Stainless Steel Bearer Plate to joint by driving VUETRADE 30mm x 2.8mm Ø Stainless Steel Connector Plate Nails with a hammer. Use only stainless steel connector plate nails with Stainless Steel Bearer Plate, usage of galvanised nails with stainless steel Bearer Plate may cause bimetallic corrosion which will weaken the timber joint.
2. Ensure that nails are driven in all appropriate nail holes to ensure product compliancy and maximum load obtained.
3. Ensure that no nails driven within 56mm of the timber butt end and 14mm to the timber edge.
4. For application of butt jointing, ensure that the Bearer Plates are installed with equal length in the timber member (symmetrically) and fix one plate on each face of the timber member.

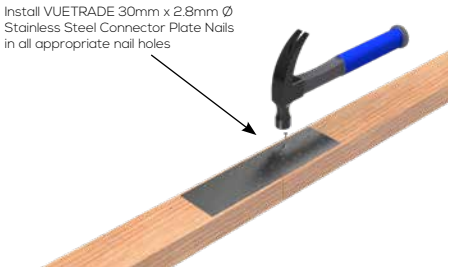

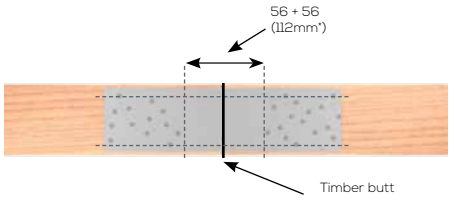

* No nails should be driven within 56mm from timber butt end or within 14mm to the timber edge to reduce risk of timber splitting.

DESIGN CAPACITY DATA

Table 66: Design capacities for a pair of Stainless Steel Bearer Plates of 80mm width at various lengths

Length	Type of Load	Design Capacity for Timber Joint Groups, kN					
		J3	J4	J5	JD3	JD4	JD5
120mm	Dead Load	See note 4(c)					
	Dead Load + Roof Live Load						
	Dead Load + Wind Load						
180mm	Dead Load	4.6	3.3	2.5	6.5	4.6	3.8
	Dead Load + Roof Live Load	6.3	4.4	3.3	8.8	6.3	5.1
	Dead Load + Wind Load	9.3	6.6	5.0	13	9.3	7.6
240mm	Dead Load	9.8	6.9	5.2	13.7	9.8	8.1
	Dead Load + Roof Live Load	13.3	9.4	7.1	18.6	13.3	10.9
	Dead Load + Wind Load	19.7	13.9	10.5	27.5	19.7	16.1
300mm	Dead Load	12.4	8.8	6.6	17.3	12.4	10.2
	Dead Load + Roof Live Load	16.7	11.8	8.9	23.4	16.7	13.7
	Dead Load + Wind Load	24.8	17.5	13.2	34.6	24.8	20.3

NOTES:

1. Design capacities in Table 66 are for a pair of plates.
2. The duration factor k1 used to derive the values above are 0.57 for dead loads, 0.77 for combination of dead load and roof live load and 1.14 for combination of dead load and wind load. Modification factors k1 for different load cases are adopted from AS1720.1-2010.
3. Design capacities in the table are based on Category 1 joints where it is applicable for failures that would be unlikely to affect an area of greater than 25m2. For Category 2 and Category 3 joints, design capacities from the table are multiplied by 0.941 and 0.882 respectively.
4. Capacities obtained above are based on the following criteria:

   a. Nail holes within 56mm from the timber end are not fixed, otherwise all holes must be fixed with VUETRADE 30mm x 2.8mm Ø Stainless Steel Connector Plate Nails.

   b. The timber end / edge distance of 56mm / 14mm according to AS1720.1-2010 shall not have any nail fixed to the timber.

   c. 80 x 120mm Bearer Plates are not recommended to be used for splice joint connection as it does not meet AS1720.1-2010 end-distance requirements of no nails shall be installed 56mm from the timber end.

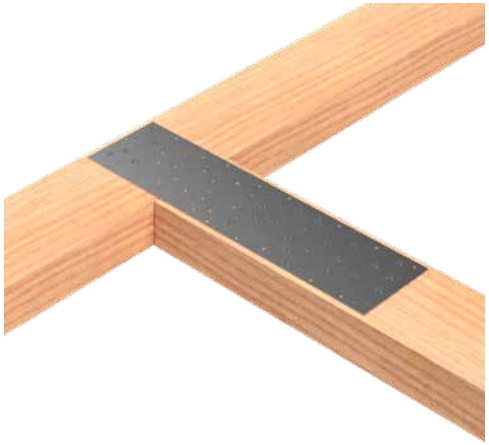

VUETRADE for the builder

STAINLESS STEEL ULTRA HEAVY DUTY ANGLES

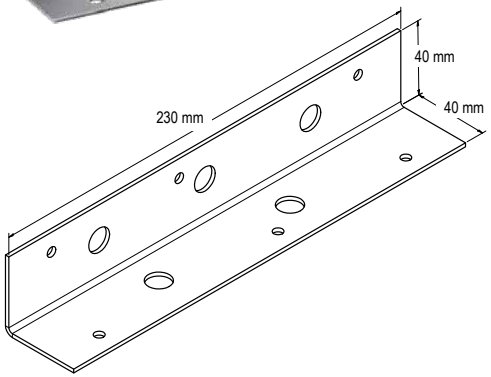

FASTENERS

Fasten all screw holes with 6x VUETRADE Type 17 12g x 35mm Stainless Steel Connector Plate Screws; or with 5x Stainless Steel M12 bolts fasten to appropriate bolt holes.

APPLICATION

Commonly used to joint timbers at right angles. This bracket can also be used for stairs or as heavy duty support brackets.

SPECIFICATION

VUETRADE Ultra Heavy Duty Angles are manufactured from 2mm thick stainless steel 304 plate bent at 90° to suit a wide range of applications. The SS304 material provides excellent corrosion protection to accommodate for application where higher risk of corrosion is present.

PRODUCT SIZES

Product Code	Dimensions (mm)	Box Quantity
VTUHDA4040	40 x 40 x 230 x 2.0	40

Bellevue Group Australasia are continuously working to develop and improve our product range.
We reserve the right to change specifications, etc. without notice. For our full disclaimer, refer to page 2.

VUETRADE for the builder

STAINLESS STEEL PERGOLA ANGLES

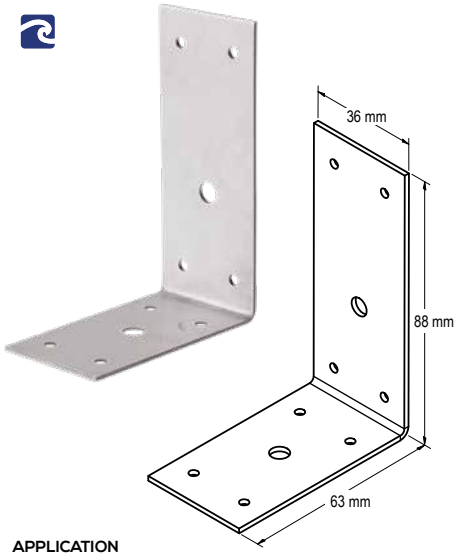

APPLICATION

Stainless Steel Pergola Angles are multi-purpose building brackets ideal for connecting pergola rafters to beams.

SPECIFICATION

VUETRADE Stainless Steel Pergola Angles are manufactured using SS 316 Stainless Steel in 1.6mm thickness and are specially made for coastal applications.

FASTENERS

Nails: 8x VUETRADE 30mm x 2.8mm Ø Stainless Steel Connector Plate Nails, **AND:**

Screw: 1x appropriate Type 17 12g x 65mm stainless steel screw

SIZES

Product Code	Size (mm)	Box Qty
VTPA36SS	88 x 63 x 36 x 1.6	200

INSTALLATION GUIDE

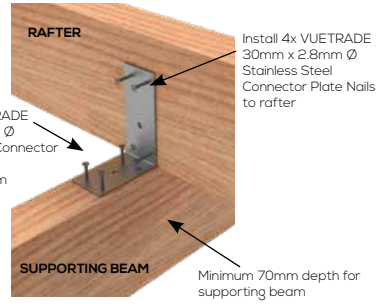

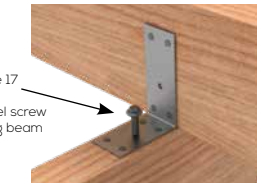

NOTES:

1. Ensure that support beam to have a minimum section size of 70mm.
2. Use only VUETRADE 30mm x 2.8mm Ø Stainless Steel Connector Plate Nails and stainless steel screws, usage of other steel materials nails and bolts with stainless steel Pergola Angles may lead to bimetallic corrosion.
3. Install nail through pre-bored nail/screw holes provided, do not punch through sheet material as it may result in a weaker, non-compliant product.

DESIGN CAPACITY DATA

Table 67: Design capacity data of Stainless Steel Pergola Angle on different joint group

Load Case	Design Capacity for Timber Joint Groups, kN					
	J3	J4	J5	JD3	JD4	JD5
Wind Uplift	3.1	2.2	1.7	4.3	3.1	2.5

NOTES:

1. Design capacities in Table 67 are based on installation of Pergola Angles with 4x VUETRADE 30mm x 2.8mm Ø Stainless Steel Connector Plate Nails on both flanges (total of 8x nails) and 2x Type 17 12g x 65mm screws.
2. Modification factors k1 for different load cases are adopted from AS1720.1-2010.
3. Design capacities in the Table 67 are based on Category 1 joints where it is applicable for failures that would be unlikely to affect an area of greater than 25m2. For Category 2 and Category 3 joints, design capacities from the table are multiplied by 0.941 and 0.882 respectively.

VUETRADE Timber Connectors is a division of **Bellevue Group Australasia**
technical@bellevuegroup.com.au **1300 850 520** www.vuetrade.com

VUETRADE for the builder

STAINLESS STEEL HOLD DOWN BRACKETS

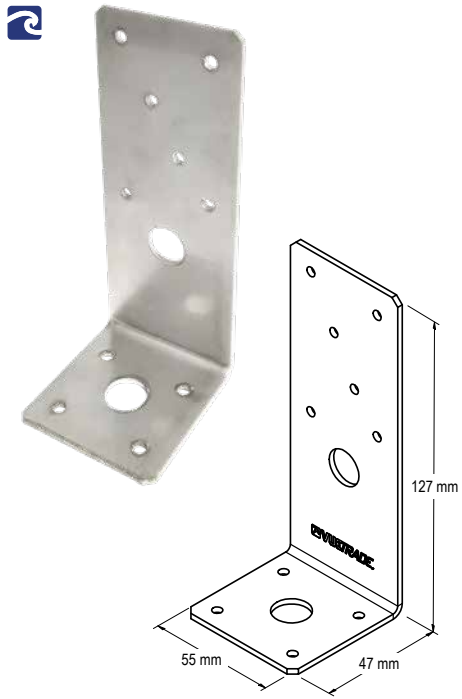

APPLICATION

VUETRADE Stainless Steel Hold Down Bracket is a heavy duty multi-purpose building bracket that provides tie down resistance, often used in the construction of wall studs and roof trusses.

SPECIFICATION

VUETRADE Stainless Steel Hold Down Brackets are manufactured in 2mm Stainless Steel 316 and are specially made for coastal applications.

FASTENERS

Nails: Use only VUETRADE 30mm x 2.8mm Ø Stainless Steel Connector Plate Nails, **AND:**

Bolts: 1x M12 stainless steel bolt / rod.

M12 bolts must be used to tie down the bracket to the supporting plate.

PRODUCT SIZES

Product Code	Size (mm)	Thickness (mm)	Box Qty
VTHDBSS	127 x 55 x 47	2.0	75

INSTALLATION AND NAILING SCHEDULE

1. Position and drill a 13mm hole through the support timber for M12 bolt.
2. Install suitable stainless steel M12 bolts onto support timber.
3. Install 6x VUETRADE 30mm x 2.8mm Ø Stainless Steel Connector Plate Nails into stud / rafter.
4. A square washer may be used with the M12 bolt.
5. Install 4x VUETRADE 30mm x 2.8mm Ø Stainless Steel Connector Plate Nails into bottom member.

BOTTOM PLATE FIXING

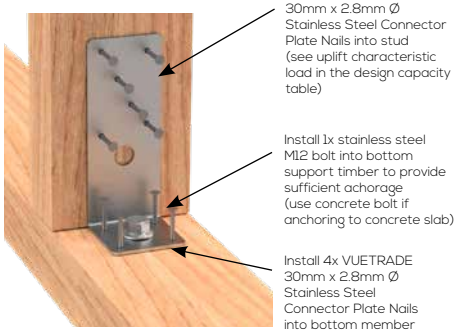

TRUSS / RAFTER TO TOP PLATE FIXING

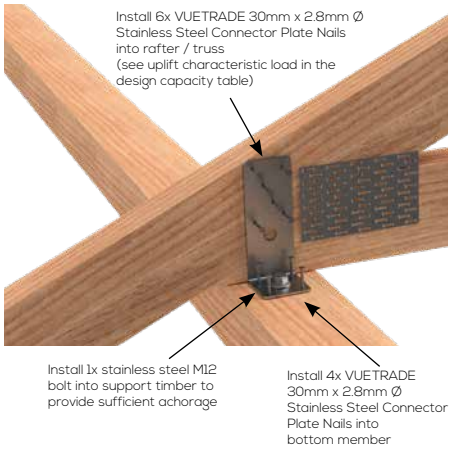

DESIGN CAPACITY DATA

Table 68: Stainless Steel Hold Down Bracket Design Capacities

Load Directions	Design Capacity, Ndj (kN) for different timber species group					
	J3	J4	J5	JD3	JD4	JD5
Wind Uplift	4.6	3.3	2.5	6.5	4.6	3.8

NOTES:

1. Design capacities in Table 68 applies to VUETRADE Hold Down Brackets, where a minimum of 6 VUETRADE 30mm x 2.8mm Ø Galvanised Connector Plate Nails are installed in the vertical member of the connection and a M12 bolt for the horizontal member for maximum tie down capacity.
2. The design capacities are calculated based on the assumption that there is sufficient anchorage on the supporting member to resist wind uplift.
3. Design capacities in Table 68 are based on Category 1 joints where it is applicable for failures that would be unlikely to affect an area of greater than 25m2. For Category 2 and Category 3 joints, design capacities from the table are multiplied by 0.941 and 0.882 respectively.
4. A pair of Hold Down Brackets may be used to double the design capacity tabulated above.
5. Only use stainless steel fasteners (nails and bolts) with Stainless Steel Hold Down Bracket, usage of other steel materials may lead to bimetallic corrosion.

VUETRADE for the builder

STAINLESS STEEL FULL STIRRUP POST SUPPORTS

BOLTED TO CONCRETE

CAST INTO CONCRETE

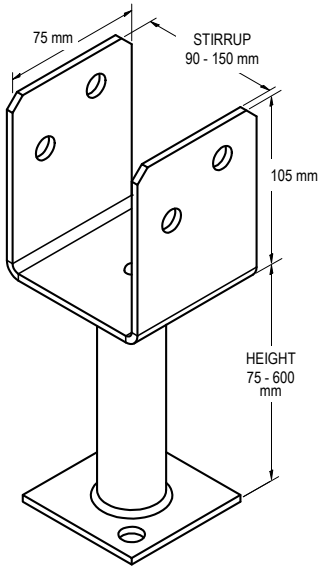

APPLICATION

VUETRADE Stainless Steel Full Stirrup Post Supports are designed to support timber posts with excellent strength. Installed either by bolting to the concrete or by casting into wet concrete. These post supports offer a strong and solid connection, with high resistance to rust specifically for applications near the coast.

SPECIFICATION

VUETRADE Stainless Steel Full Stirrup Post Supports are available to be manufactured in two materials, SS304 and SS316.

FASTENERS

Saddle: 2x Stainless Steel VUEBOLT or appropriate M12 bolts with hex nuts

Base: 2x stainless steel M12 concrete bolts or equivalent

Only use stainless steel fasteners (bolts) with stainless steel post support, usage of other steel materials may lead to bimetallic corrosion.

SIZES

Stainless Steel Full Stirrup Post Support stirrup sizes range from 90 to 150mm, and leg sizes from 75 to 600mm. Common sizes include:

Product Code	Stirrup Size (mm)	Height (mm)	Box Qty
VPS13090SS	90	130	10
VPS130115SS	115	130	10
VPS130125SS	125	130	10
VPS130135SS	135	130	10
VPS20090SS	90	200	10
VPS30090SS	90	300	10

* For extensive listing of standard and custom sized Stainless Steel Full Stirrups, refer to the VUETRADE Full Stirrup Post Support webpage.

MATERIAL SPECIFICATION

Stainless Steel 304

Composition: 18 % Chromium, 8% Nickel

Corrosion resistance: Good resistance to oxidation and corrosion, but weak against acidic environment

Stainless Steel 316

Composition: 16% Chromium, 10% Nickel, 2% Molybdenum

Corrosion resistance: Superior corrosion resistance against acidic/high chloride environments

NOTE:

'Tea-staining' is a cosmetic issue with some VUETRADE Stainless Steel Post Supports (more prevalent in SS304) but this does not affect the structural integrity or material lifetime of the post support.

INSTALLATION GUIDE AND BOLT FIXING SCHEDULE

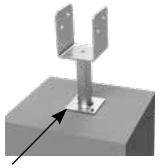

OR

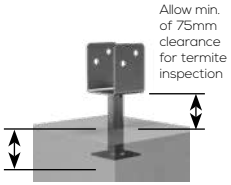

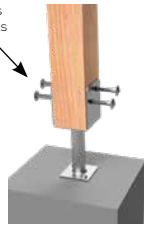

NOTES:

1. Embedment depth of VUETRADE Post Support should be determined and calculated by a Structural Engineer to achieve the reported design load. This usually depends on the type of concrete used, aggregate ratio etc.
2. 75mm clearance must be provided to conform to the requirements set out by AS3660.1:2014 - *Termite management, Part 1: New building work.*

DESIGN CAPACITY DATA

Table 69: Design capacities of Full Stirrup Post Support on various timber joint groups

Load Case	Design Capacity, Ndj (kN)					
	J3	J4	J5	JD3	JD4	JD5
Uplift capacity	12.7	10.0	8.7	15.8	12.7	11.0

NOTES:

1. Design capacity in Table 69 applies to VUETRADE Post Supports where 2x M12 bolts are installed and tightly fastened with nuts.
2. Timber posts must have minimum dimensions of 90mm by 90mm section and shall be installed flat to the base of the post support.
3. Design capacities for post supports bolted or cast into concrete assume that there is sufficient anchorage in the concrete to resist the pull-out force imposed by wind loading.
4. Design capacities in the above table are for wind uplift (vertical force direction) only and areas obtained under strict test condition defined by AS1649-2001 – *Timber - Methods of test for mechanical fasteners and connectors.*
5. VUETRADE Post Supports should only be used to resist wind uplift / dead load as specified in the TDS and should not be assumed to provide lateral stability. Sufficient bracing should be provided and approved by a structural engineer for lateral stability.
6. Design capacity of post support may be limited by the withdrawal tensile capacity of concrete bolts used to fasten post support to concrete ground. Ensure that suitable concrete bolts are used for above design capacities to be valid.

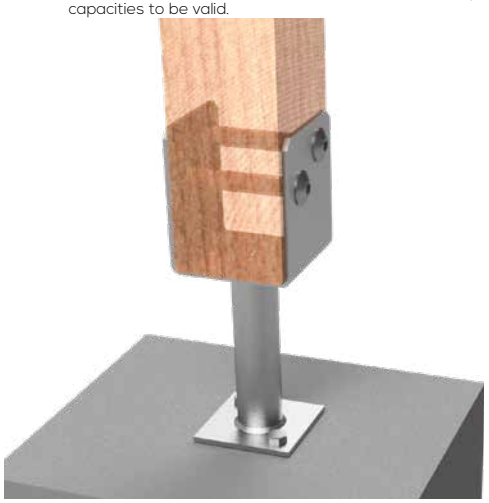

VUETRADE for the builder

STAINLESS STEEL HALF STIRRUP POST SUPPORTS

BOLTED TO CONCRETE

CAST INTO CONCRETE

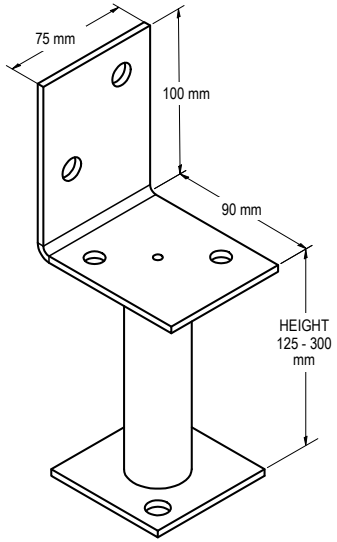

APPLICATION

VUETRADE Stainless Steel Half Stirrup Post Supports are typically used when builders only have access to bolt one side of the timber post. Installed either by bolting to the concrete or by casting into wet concrete, these post supports offer high resistance to rust specifically for applications near the coast.

SPECIFICATION

VUETRADE Stainless Steel Half Stirrup Post Supports are available to be manufactured in two materials, SS304 and SS316.

FASTENERS

Saddle: 2x Stainless Steel VUEBOLT or appropriate M12 bolts with hex nuts

Base: 2x stainless steel M12 concrete bolts or equivalent

Only use stainless steel fasteners (bolts) with stainless steel post support, usage of other steel materials may lead to bimetallic corrosion.

SIZES

Product Code	Material	Height (mm)	Box Qty
VHSPS125SS	SS304	125	10
VHSPS200SS304	SS304	200	10
VHSPS300SS304	SS304	300	10
VHSPS125SS316	SS316	125	10
VHSPS200SS316	SS316	200	10
VHSPS300SS316	SS316	300	10

MATERIAL SPECIFICATION

Stainless Steel 304

Composition: 18 % Chromium, 8% Nickel

Corrosion resistance: Good resistance to oxidation and corrosion, but weak against acidic environment

Stainless Steel 316

Composition: 16% Chromium, 10% Nickel, 2% Molybdenum

Corrosion resistance: Superior corrosion resistance against acidic/high chloride environments

NOTE:

'Tea-staining' is a cosmetic issue with some VUETRADE Stainless Steel Post Supports (more prevalent in SS304) but this does not affect the structural integrity or material lifetime of the post support.

VUETRADE for the builder

INSTALLATION GUIDE AND BOLT FIXING SCHEDULE

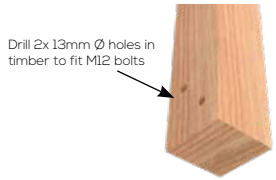

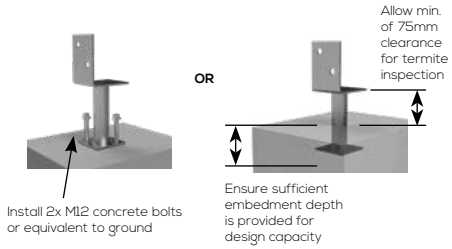

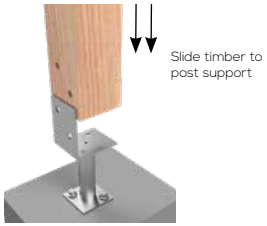

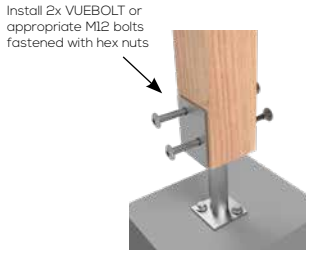

NOTES:

1. Embedment depth of VUETRADE Post Support should be determined and calculated by a Structural Engineer in order to achieve the reported design load. This usually depends on the type of concrete used, aggregate ratio etc.
2. 75mm clearance must be provided to conform to the requirements set out by AS3660.1:2014 - *Termite management, Part 1: New building work.*

DESIGN CAPACITY DATA

Table 70: Design capacities of Stainless Steel Half Stirrup Post Support on various timber joint groups

Load Case	Design Capacity, Ndj (kN)					
	J3	J4	J5	JD3	JD4	JD5
Uplift capacity	6.3	5.0	4.3	7.9	6.3	5.5

NOTES:

1. Design capacity in Table 70 applies to VUETRADE Post Supports where 2x M12 bolts are installed and tightly fastened with nuts.
2. Timber posts must have minimum dimensions of 90mm by 90mm section and shall be installed flat to the base of the post support.
3. Design capacities for post supports bolted or cast into concrete are based on the assumption that there is sufficient anchorage in the concrete to resist the pull-out force imposed by wind loading.
4. Design capacities in the above table are for wind uplift (vertical force direction) only and areas obtained under strict test condition defined by AS1649-2001 – *Timber - Methods of test for mechanical fasteners and connectors.*
5. VUETRADE Post Supports should only be used to resist wind uplift / dead load as specified in the TDS and should not be assumed to provide lateral stability. Sufficient bracing should be provided and approved by a structural engineer for lateral stability.
6. Design capacity of post support may be limited by the withdrawal tensile capacity of concrete bolts used to fasten post support to concrete ground. Ensure that suitable concrete bolts are used for above design capacities to be valid.

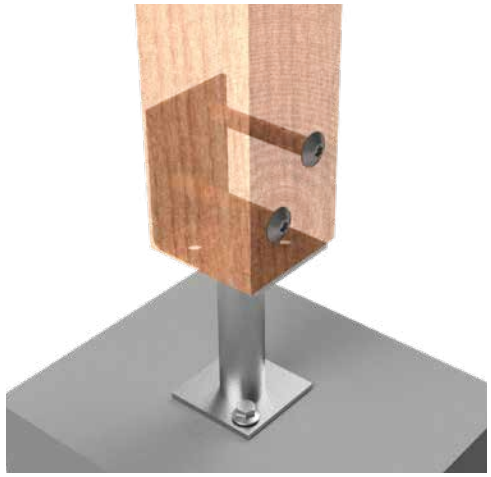

VUETRADE for the builder

STAINLESS STEEL CENTRE BLADED POST SUPPORTS

BOLTED TO CONCRETE

CAST INTO CONCRETE

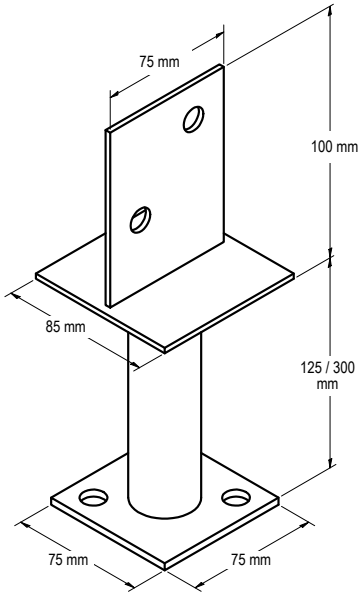

APPLICATION

Stainless Steel Centre Blade Post Supports are brackets ideal for coastal construction, with the 'hidden' blade providing a neat finish at the base of a timber post.

SPECIFICATION

VUETRADE Stainless Steel Centre Bladed Post Supports are manufactured using SS304/SS316.

FASTENERS

Saddle: 2x Stainless Steel VUEBOLT or appropriate M12 bolts with hex nuts

Base: 2x stainless steel M12 concrete bolts or equivalent

Only use stainless steel fasteners (bolts) with stainless steel post support, usage of other steel materials may lead to bimetallic corrosion.

SIZES

Product Code	Material	Height (mm)	Box Qty
VBLPS125SS	SS 304	125	10
VBLPS125SS316	SS 316	125	10
VBLPS300SS	SS 304	300	10
VBLPS300SS316	SS 316	300	10

NOTE:

'Tea-staining' is a cosmetic issue with some VUETRADE Stainless Steel Post Supports (more prevalent in SS304) but this does not affect the structural integrity or material lifetime of the post support.

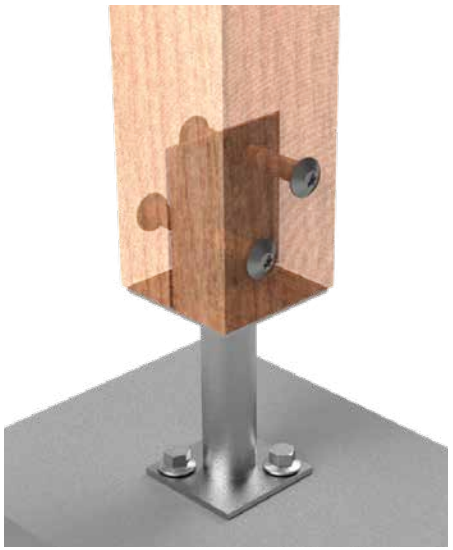

VUETRADE for the builder

INSTALLATION GUIDE AND BOLT FIXING SCHEDULE

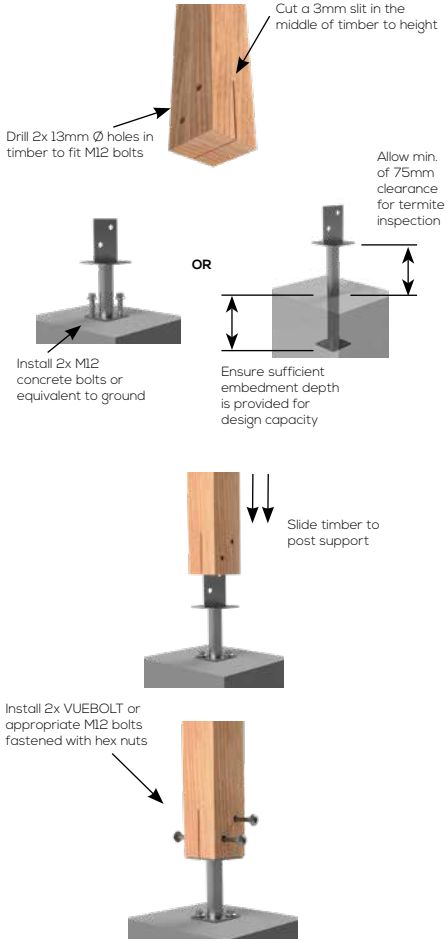

NOTES:

1. Embedment depth of VUETRADE Post Support should be determined and calculated by a Structural Engineer to achieve the reported design load. This usually depends on the type of concrete used, aggregate ratio etc.
2. 75mm clearance must be provided to conform to the requirements set out by AS3660.1:2014 - *Termite management, Part 1: New building work.*

DESIGN CAPACITY DATA

Table 71: Design Capacity of Stainless Steel Centre Blade Post Support in different joint groups

Load Case	Design Capacity, Ndj (kN)					
	J3	J4	J5	JD3	JD4	JD5
Uplift capacity	11.3	9.0	7.8	14.1	11.3	9.9

NOTES:

1. Design capacity in table above applies to VUETRADE Post Supports where 2x M12 bolts are installed and tightly fastened with nuts/VUEBOLT.
2. Timber posts must have minimum dimensions of 90mm by 90mm section and shall be installed flat to the base of the post support.
3. Design capacities for post supports bolted or cast into concrete assumed that there is sufficient anchorage in the concrete to resist the pull-out force imposed by wind loading.
4. Design capacities in the above table are for wind uplift (vertical force direction) only and are obtained under strict in-house test conditions defined by AS1649-2001 – *Timber - Methods of test for mechanical fasteners and connectors* & uplift capacity requirements outlined in AS1720.1-2010 – *Timber structures, Part 1: Design methods.*
5. VUETRADE Post Supports should only be used to resist wind uplift / dead load as specified in the TDS and should not be assumed to provide lateral stability. Sufficient bracing should be provided and approved by a structural engineer for lateral stability.

VUETRADE for the builder

STAINLESS STEEL BOLT DOWN POST SUPPORTS

BOLTED TO CONCRETE

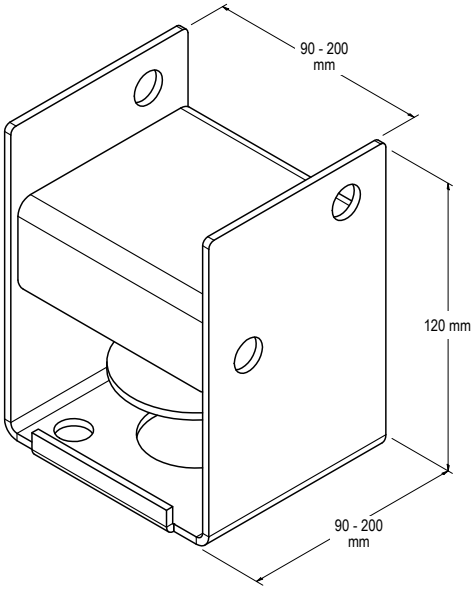

APPLICATION

Stainless Steel Bolt Down Post Supports are anchors ideal for bolting down timber posts in coastal areas.

SPECIFICATION

VUETRADE Stainless Steel Bolt Down Post Supports are available in two different materials, SS304 and SS316 in 2mm thickness (only in Bolt Down 90) & 4mm thickness (rest of bolt down PS range).

The Bolt Down 90 can also be installed to conceal or open the gap that shows bolts and washers within the post support.

FASTENERS

Saddle: 2x Stainless Steel VUEBOLT or appropriate M12 bolts with hex nuts

Base: **Method 1:** 1x M12 stainless steel concrete bolt or equivalent fastened with supplied washer, **OR:**

Method 2: 2x M12 stainless steel concrete bolts or equivalent in specified bolt holes

For Stainless Steel Bolt Down Post Supports 115mm in size and over, only Method 2 is possible.

Only use stainless steel fasteners (bolts) with stainless steel post support, usage of other steel materials may lead to bimetallic corrosion.

SIZES

Product Code	Stirrup Size (mm)	Saddle & Base Thickness (mm)	Box Qty
VBPS90SS	90	2	10
VBPS100SS	100	4	10
VBPS115SS	115	4	10
VBPS125SS	125	4	10
VBPS135SS	135	4	10
VBPS140SS304	140	4	10
VBPS150SS304	150	4	10
VBPS200SS	200	4	10

Codes above are for Stainless Steel 304 products, for Stainless Steel 316 add '316' to the end of the code.

NOTE:

'Tea-staining' is a cosmetic issue with some VUETRADE Stainless Steel Post Supports (more prevalent in SS304) but this does not affect the structural integrity or material lifetime of the post support.

INSTALLATION GUIDE AND BOLT FIXING SCHEDULE

METHOD 1

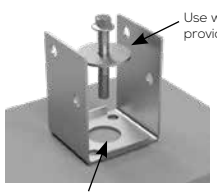

METHOD 2

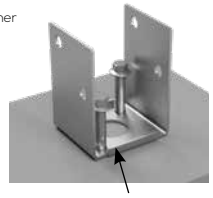

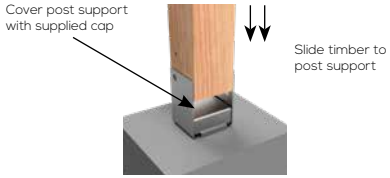

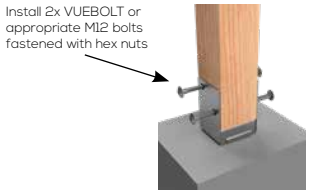

NOTES:

1. Method 1 is suitable when a larger tolerance of adjustment is needed after bolt holes are drilled. Washers are used in this fixing type to provide hold down strength to post support.
2. Method 2 is suitable when precise fixing and excellent holding strength are desired.
3. Ensure that suitable M12 concrete bolts are used when bolting post support to ground.
4. VUEBOLT may be used as an alternative to standard M12 bolts when fixing post support to timber posts for a concealed and smooth finish.

DESIGN CAPACITY DATA

Table 72: Design Capacity of Stainless Steel Bolt Down Post Support in different joint groups

Load Case	Design Capacity, Ndj (kN)					
	J3	J4	J5	JD3	JD4	JD5
Uplift capacity	9.4	7.5	6.5	11.8	9.4	8.2

NOTES:

1. Ensure that suitable M12 stainless steel concrete bolts are used when bolting post support to ground.
2. Use only stainless steel bolts with stainless steel post support, usage of other steel materials bolt with stainless steel post support may lead to bimetallic corrosion.
3. Fixing of stainless steel VUEBOLT may be used as an alternative to standard M12 bolts when fixing post support to timber posts for smooth architectural finish.
4. Design capacity in the above table applies to VUETRADE Post Supports where 2x M12 SS bolts are installed and tightly fastened with hex nuts.
5. Bolts at the base of the post supports must have sufficient anchorage to resist wind uplift.
6. Timber post dimensions must have a minimum dimension of 90mm by 90mm section.
7. Design capacities in both tables are for forces in the vertical direction (wind uplifts) only and are obtained under test conditions defined in AS1649-2001 – *Timber - Methods of test for mechanical fasteners and connectors* & uplift capacity requirements outlined in AS1720.1-2010 – *Timber structures, Part 1: Design methods.*
8. VUETRADE Post Supports should only be used to resist wind uplift / dead load as specified in the TDS and should not be assumed to provide lateral stability. Sufficient bracing should be provided and approved by a structural engineer for lateral stability.
9. Design capacity of post support may be limited by the withdrawal tensile capacity of concrete bolts used to fasten post support to concrete ground. Ensure that suitable concrete bolts are used for above design capacity to be valid.

VUETRADE for the builder

STAINLESS STEEL T-BLADE POST SUPPORTS

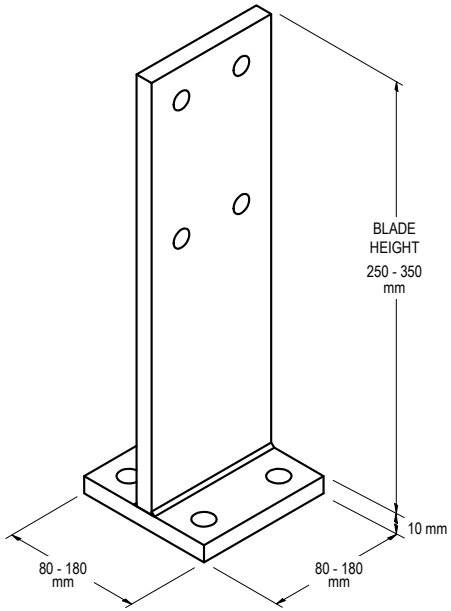

APPLICATION

Stainless Steel T-Blade Post Supports are brackets ideal for concealed, bolted fixing of feature timber posts on the coast.

SPECIFICATION

VUETRADE Stainless Steel T-Blade Post Supports are made from 10mm thick steel and are available in two different materials, SS304 and SS316.

FASTENERS

Saddle: 4x Stainless Steel VUEBOLT or appropriate M12 / M16 bolts with hex nuts*

Base: 4x stainless steel M12 / M16 concrete bolts or equivalent*

* Based on product size.

Only use stainless steel fasteners (bolts) with stainless steel post support, usage of other steel materials may lead to bimetallic corrosion.

See installation guide for full fastening details.

SIZES

Table 73: Stainless Steel T-Blade Product Sizes

Product Code	Blade Height (mm)	Base Size (mm x mm)	Post Size Suitability (mm)	Bolt Size	Box Qty
VBPTB 90100SS	250	80 x 80	90 – 100	M12	6
VBPTB 115140SS	275	110 x 110	115 – 140	M16	6
VBPTB 150180SS	300	140 x 140	150 – 180	M16	4
VBPTB 180200SS	350	180 x 180	180 – 250	M16	2

Codes above are for Stainless Steel 304 products, for Stainless Steel 316 add '316' to the end of the code.

NOTE:

'Tea-staining' is a cosmetic issue with some VUETRADE Stainless Steel Post Supports (more prevalent in SS304) but this does not affect the structural integrity or material lifetime of the post support.

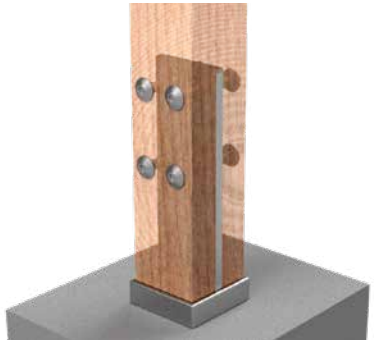

Bellevue Group Australasia are continuously working to develop and improve our product range.
We reserve the right to change specifications, etc. without notice. For our full disclaimer, refer to page 2.

VUETRADE for the builder

Timber Connectors
Compliance Data

INSTALLATION GUIDE AND BOLT FIXING SCHEDULE

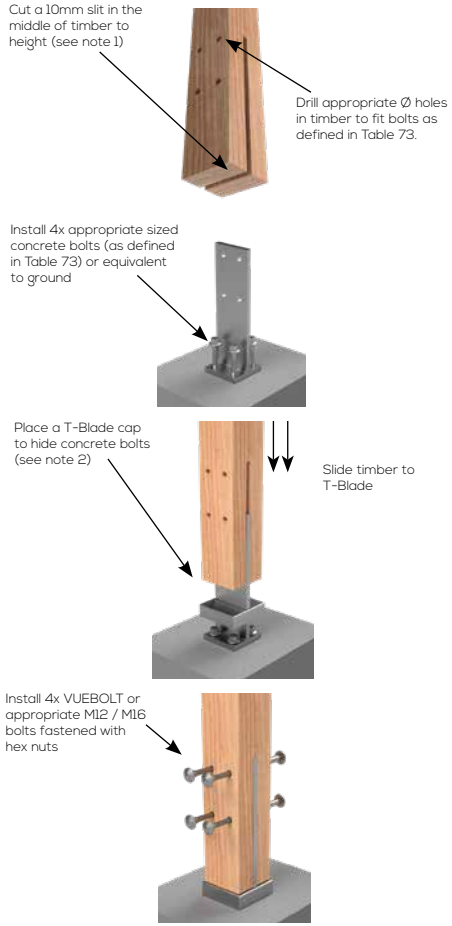

NOTES:

1. VUETRADE has prepared a comprehensive cutting schedule for all sizes of T-Blade post supports containing precise cutting and drilling measurements. Refer to the VUETRADE T-Blade Post Support webpage to access the cutting schedule.
2. T-Blade cap sold separately, VUETRADE recommends fitting T-Blade caps on T-Blade for concealed finish. Visit the VUETRADE T-Blade cap page here for more information.
3. VUEBOLT may be used as an alternative to standard bolts when fixing post support to timber posts for a concealed and smooth finish.

DESIGN CAPACITY DATA

Table 74: Design capacity of Stainless Steel T-Blade Post Support fixed with 4x bolts on various timber joint groups

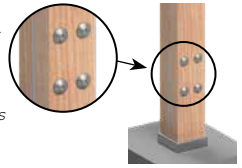

Joint Group	J3	J4	J5	JD3	JD4	JD5
M12 Bolt	47.4	37.7	32.6	57.0	47.4	41.4
M16 Bolt	57.0	57.0	57.0	57.0	57.0	57.0

Table 75: Design capacity of Stainless Steel T-Blade Post Support fixed with 2x bolts on various timber joint groups

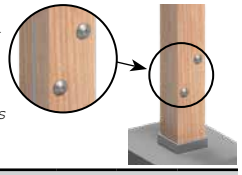

Joint Group	J3	J4	J5	JD3	JD4	JD5
M12 Bolt	23.7	18.8	16.3	29.5	23.7	20.7
M16 Bolt	42.3	33.3	28.8	52.3	42.3	36.7

NOTES:

1. The design capacity of Stainless Steel T-Blade is capped at 57kN. 57kN is the maximum uplift force from the test carried out before the bolt from the base of the grip failed. At this point, there were no signs of failure in the T-Blade except for minor cupping at its base.
2. The capacities were determined based on loads that are acting parallel to the grain of the timber.
3. Modification factors k1 for different load cases are adopted from AS1720.1-2010.
4. Design capacities in the above tables are based on Category 1 joints where it is applicable for failures that would be unlikely to affect an area of greater than 25m2. For Category 2 and Category 3 joints, design capacities from the table are multiplied by 0.941 and 0.882 respectively.
5. VUETRADE Post Supports should only be used to resist wind uplift / dead load as specified in the TDS and should not be assumed to provide lateral stability. Sufficient bracing should be provided and approved by a structural engineer for lateral stability.
6. Two bolts may be used instead of four, however strength verification must be conducted by a structural engineer to ensure that the two bolt usage is acceptable.
7. If fixing using two bolts, bolts should be fixed using non-adjacent bolt holes (use holes diagonally as shown in figure above).

VUETRADE Timber Connectors is a division of **Bellevue Group Australasia**
technical@bellevuegroup.com.au **1300 850 520** www.vuetrade.com

VUETRADE for the builder

STAINLESS STEEL T-BLADE POST SUPPORT WITH LEG

BOLTED TO CONCRETE

CAST INTO CONCRETE

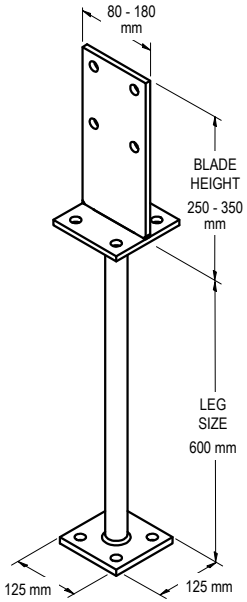

APPLICATION

Stainless Steel T-Blade Post Supports with Legs are concealed anchors ideal for coastal use, installed by bolting timber posts onto or setting them into concrete.

SPECIFICATION

VUETRADE Stainless Steel T-Blade Post Supports are SS304, with a 600mm long x 73mm diameter leg.

FASTENERS

Saddle: 4x Stainless Steel VUEBOLT or appropriate M12 / M16 bolts with hex nuts*

Base: 4x stainless steel M12 / M16 concrete bolts or equivalent*

* Based on product size.

Only use stainless steel fasteners (bolts) with stainless steel post support, usage of other steel materials may lead to bimetallic corrosion.

SIZES

All VUETRADE T-Blade Post Supports are 10mm in thickness.

Product Code	Blade Height (mm)	Base Size (mm x mm)	Suits Post Size (mm)	Bolt Size	Leg Dimensions (mm)
VHDBLPS 60080SS	250	80 x 80	90-100	M12	600 x 35Ø
VHDBLPS 600110SS	275	110 x 110	115-140	M16	600 x 35Ø
VHDBLPS 600140SS	300	140 x 140	150-180	M16	600 x 73Ø
VHDBLPS 600180SS	350	180 x 180	180-200	M16	600 x 73Ø

* Stainless Steel 316 and custom sizes are also available, refer to the VUETRADE Stainless Steel T-Blade Post Support with Leg webpage.

NOTE:

'Tea-staining' is a cosmetic issue with some VUETRADE Stainless Steel Post Supports (more prevalent in SS304) but this does not affect the structural integrity or material lifetime of the post support.

INSTALLATION GUIDE AND BOLT FIXING SCHEDULE

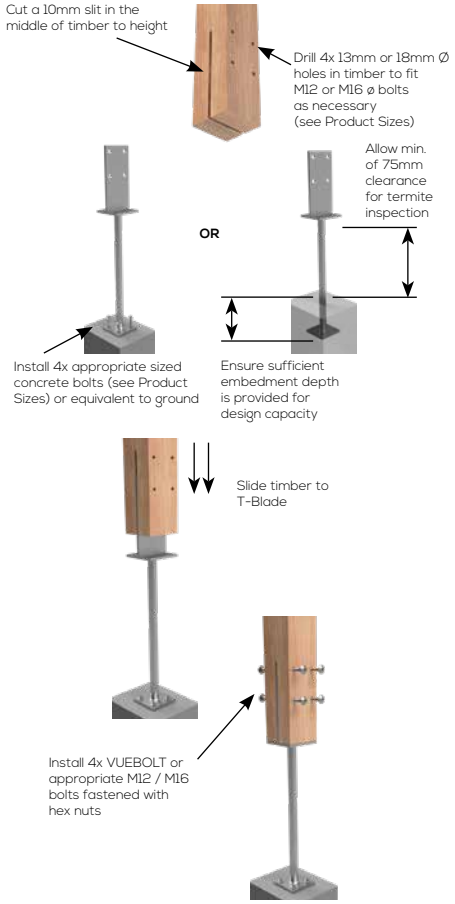

NOTES:

1. Embedment depth of the T-Blade post support should be determined and calculated by a Structural Engineer in order to achieve the reported design load. This usually depends on the type of concrete used, aggregate ratio etc.
2. 75mm clearance must be provided to conform to the requirements set out by AS3660.1:2014 - *Termite management, Part 1: New building work.*
3. Use only Stainless Steel bolts when fastening with a Stainless Steel post support; do not use galvanised bolts as it may lead to accelerated corrosion to the post support and the bolts.

DESIGN CAPACITY DATA

Table 76: Design capacity of Stainless Steel T-Blade Post Support with Leg fixed with 4x bolts on various timber joint groups

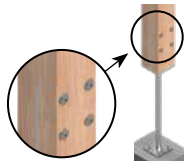

Joint Group	J3	J4	J5	JD3	JD4	JD5
M12 Bolt	47.4	37.7	32.6	57.0	47.4	41.4
M16 Bolt	57.0	57.0	57.0	57.0	57.0	57.0

Table 77: Design capacity of Stainless Steel T-Blade Post Support with Leg fixed with 2x bolts on various timber joint groups

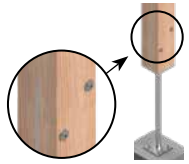

Joint Group	J3	J4	J5	JD3	JD4	JD5
M12 Bolt	23.7	18.8	16.3	29.5	23.7	20.7
M16 Bolt	42.3	33.3	28.8	52.3	42.3	36.7

NOTES:

1. The design capacity of Stainless Steel T-Blade is capped at 57kN. 57kN is the maximum uplift force from the test carried out before the bolt from the base of the grip failed. At this point, there were no signs of failure in the T-Blade except for minor cupping at its base.
2. The capacities were determined based on loads that are acting parallel to the grain of the timber.
3. Modification factors k1 for different load cases are adopted from AS1720.1-2010.
4. Design capacities in the above tables are based on Category 1 joints where it is applicable for failures that would be unlikely to affect an area of greater than 25m2. For Category 2 and Category 3 joints, design capacities from the table are multiplied by 0.941 and 0.882 respectively.
5. VUETRADE Post Supports should only be used to resist wind uplift / dead load as specified in the TDS and should not be assumed to provide lateral stability. Sufficient bracing should be provided and approved by a structural engineer for lateral stability.
6. Two bolts may be used instead of four, however strength verification must be conducted by a structural engineer to ensure that the two bolt usage is acceptable.
7. If fixing using two bolts, bolts should be fixed using non-adjacent bolt holes (use holes diagonally as shown in figure above).

VUETRADE for the builder

STAINLESS STEEL CYCLONIC POST SUPPORTS

CAST INTO CONCRETE

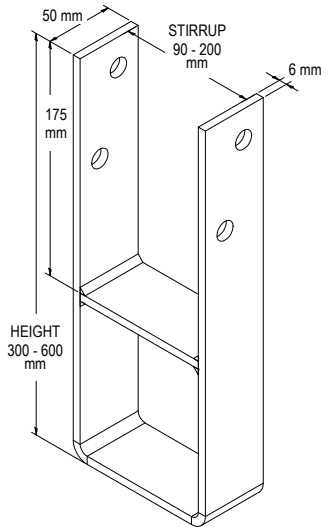

APPLICATION

The VUETRADE Cyclonic Post Support is engineered and designed for use in cyclone-prone and high wind areas. The U-shaped base provides excellent anchorage when set into concrete to withstand the large force imposed by high winds and cyclones.

SPECIFICATION

VUETRADE Cyclonic Post Supports are manufactured out of Stainless Steel 304 and 316 in 6mm thickness.

Use of stainless steel is recommended in applications where a high corrosion risk is expected and where hot-dipped galvanised corrosion protection is inadequate. Stainless Steel 316 has better corrosion protection characteristics than SS304 due to the presence of molybdenum in SS316.

FASTENERS

Saddle: 2x Stainless Steel VUEBOLT or appropriate M12 bolts with hex nuts

Only use stainless steel fasteners (bolts) with stainless steel post support, usage of other steel materials may lead to bimetallic corrosion.

SIZES

Product Code	Height (mm)	Stirrup Size (mm)	Box Qty
VCYPS45090SS	450	90	6
VCYPS450100SS	450	100	6
VCYPS60090SS	600	90	6
VCYPS600100SS	600	100	6

* Custom sizes are also available, refer to the VUETRADE Stainless Steel Cyclonic Post Support webpage.

NOTE:

'Tea-staining' is a cosmetic issue with some VUETRADE Stainless Steel Post Supports (more prevalent in SS304) but this does not affect the structural integrity or material lifetime of the post support.

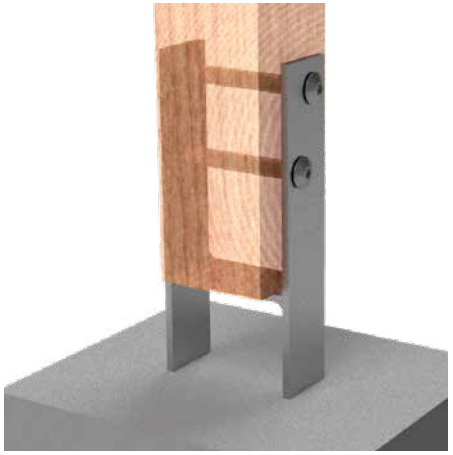

INSTALLATION GUIDE AND BOLT FIXING SCHEDULE

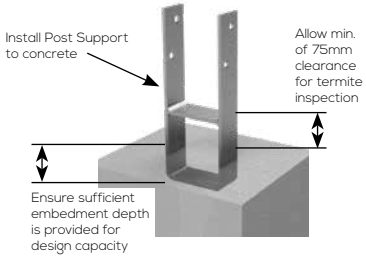

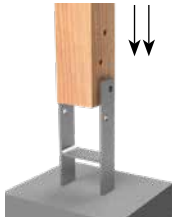

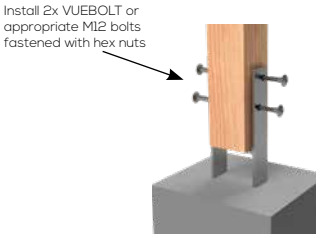

NOTES:

1. Embedment depth of the cyclonic post support should be determined and calculated by a Structural Engineer in order to achieve the reported design load. This usually depends on the type of concrete used, aggregate ratio etc.
2. 75mm clearance must be provided to conform to the requirements set out by AS3660.1:2014 - *Termite management, Part 1: New building work.*
3. Use only Stainless Steel M12 bolts when fastening with a Stainless Steel post support; do not use galvanised bolts as it may lead to accelerated corrosion to the post support and the bolts.
4. Refer to AS1684.3:2021 Table 9.20 (j) for reinforced rod installation requirements.

DESIGN CAPACITY DATA

Table 78: Design capacity of stainless steel cyclonic post support

Load Directions	Design Capacity, Ndj (kN) for timber species group JD4
Wind Uplift	41 kN

NOTES:

1. The design capacity in Table 78 applies to VUETRADE cyclonic post support where 2x M12 bolts are installed and tightly fastened with nuts.
2. Timber post dimensions must have minimum dimensions of 90mm by 90mm section and shall be installed flat to the base of the cyclonic post support.
3. The design capacities are calculated based on the assumption that there is sufficient anchorage in the concrete to resist the pull-out force imposed by wind loading.
4. Design capacity in above table is for wind uplift (vertical force direction) only and are obtained under the test conditions set out in AS1649-2001 – *Timber - Methods of test for mechanical fasteners and connectors.*
5. VUETRADE Post Supports should only be used to resist wind uplift / dead load as specified in the TDS and should not be assumed to provide lateral stability. Sufficient bracing should be provided and approved by a structural engineer for lateral stability.

VUETRADE for the builder

STAINLESS STEEL ANT CAPS

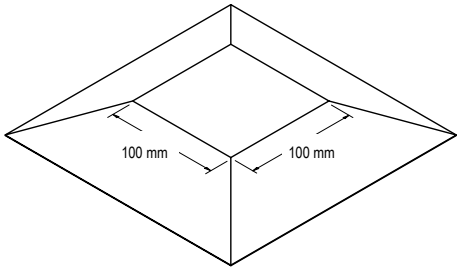

APPLICATION

VUETRADE Stainless Steel Ant Caps provide a barrier between supporting timber, metal or masonry stumps / bases and floor timbers; and are specifically for use in areas where termites invade and degrade timber construction.

SPECIFICATION

VUETRADE Stainless Steel Ant Caps are manufactured out of Stainless Steel 316. SS316 which contains 2-3% molybdenum provides better corrosion resistance for use in coastal areas.

SIZE

Product Code	Size (mm)	Flange Size	Details
ANTCAPSS	100 x 100	25mm	No Hole

AS3660.1:2014 TERMITE MANAGEMENT PART 1: NEW BUILDING WORK

Material Specifications for Ant Caps

- Minimum thickness of 0.5mm.
- Steel shall be galvanised as minimum in accordance to AS/NZS4680:2006 with zinc and coating class of at least Z275.

Design Specifications

- The ant cap shall have a plane surface of size and shape to fully cover the top of the post.
- The ant cap shall project on all sides so that no edge shall be less than 40mm from the vertical face of the wall when the edges are turned down at an angle from the horizontal face. (i.e. flange size should be more than 40mm)
- Ensure that correct ant cap materials are used in appropriate corrosion exposure zones to minimise corrosion attack. For high corrosion exposure zones, Stainless Steel ant caps are recommended.
- Ensure that Ant Cap does not come in contact with other components of building work where electrolytic corrosion may occur and induce accelerated corrosion, i.e. Stainless Steel Ant Cap should not come in contact with a galvanised frame.

STAINLESS STEEL SUB FLOOR PUNCHED GRID VENTS

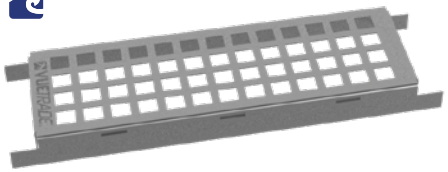

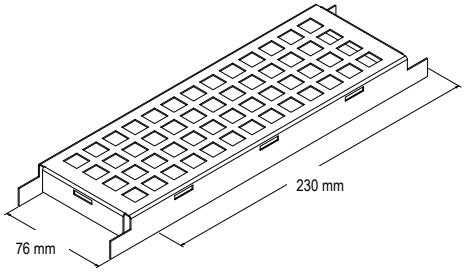

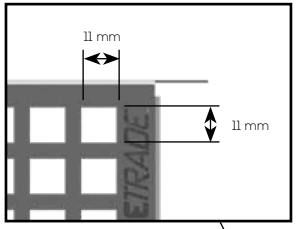

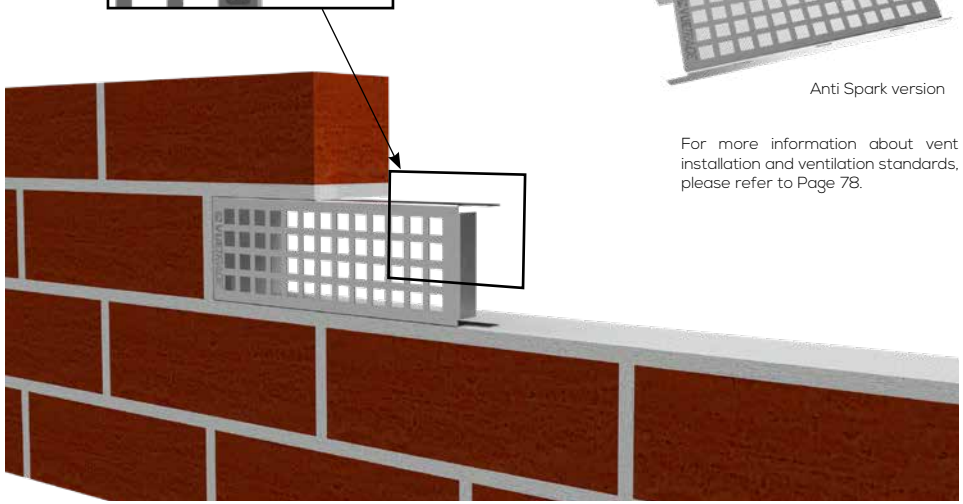

APPLICATION

VUETRADE Stainless Steel Sub Floor Punched Grid Vents provide ventilation in brick and block walls. These vents are designed to be inserted into the wall during masonry construction. In areas that are prone to bush fires, an anti-spark mesh panel insert is also available to a rating of BAL-40.

SPECIFICATION

VUETRADE Stainless Steel Sub Floor Punched Grid Vents are manufactured out of Stainless Steel 316.

SUB FLOOR PUNCHED GRID VENTS

Material: Stainless Steel 316
Hole Size: 11mm by 11mm (See figure below)
Air Flow: Refer to table below

ANTI SPARK SUB FLOOR PUNCHED GRID VENTS

Material: Stainless Steel 316
Wire diameter: 0.9mm
Aperture: 1.64mm
BAL Rating : Up to and including BAL-40 (40kW/m2)

SIZES

Product Code	Size (mm)	Air Flow (mm2)	Box Qty
VTSFV230X76SS	230 x 76	6 178	20
VTSFVAS230X76SS	230 x 76	2 576	20

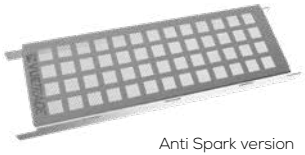

Anti Spark version

For more information about vent installation and ventilation standards, please refer to Page 78.

VUETRADE for the builder

STAINLESS STEEL R3 BRICK VENEER TIES

APPLICATION

VUETRADE Brick Veneer Ties function as a means of joining the cavity of wall frames and brickwork together and are often installed during construction. Brick Ties are important in the stability of a building.

They are suitable for use with TIMBER FRAMES only.

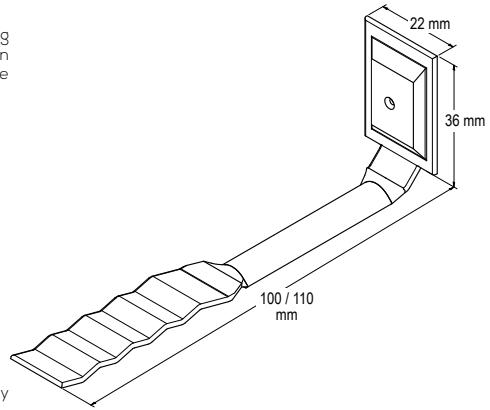

LIGHT DUTY WITH NAILS

R3

SPECIFICATION

VUETRADE Light Duty Brick Veneer Ties are rated as light duty conforming to AS2699.1:2020 and AS3700:2018.

Cavity Width	50mm
Usage	1km to 10km from breaking surf, or 100m to 1km from sheltered coastal
Fixing	Use only the supplied VUETRADE 30mm x 3.2mm Ø Stainless Steel Fixing Nail

MEDIUM DUTY WITH SCREWS

R3

SPECIFICATION

VUETRADE Medium Duty Brick Veneer Ties are rated as medium duty conforming to AS2699.1:2020 and AS3700:2018.

Cavity Width	50mm
Usage	1km to 10km from breaking surf, or 100m to 1km from sheltered coastal
Fixing	Use only the supplied VUETRADE 30mm x 4.5mm Ø Stainless Steel Fixing Screw

DETAILS

Product Code	Material	Durability Classification	Box Qty
VBTLDR3	SS 304	R3	150
VBTMDR3	SS 304	R3	150

R3

DURABILITY CLASSIFICATION

1km to 10km from breaking surf,
or 100m to 1km from sheltered coastal

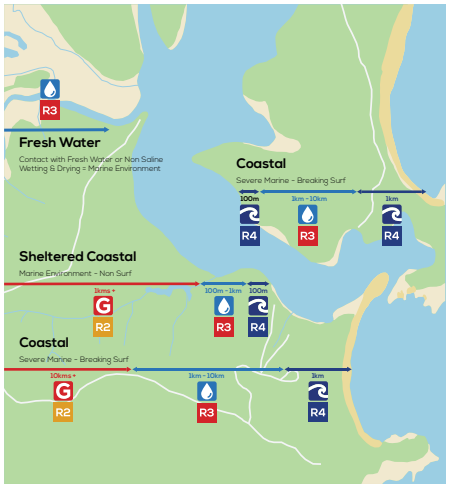

Bellevue Group Australasia are continuously working to develop and improve our product range.
We reserve the right to change specifications, etc. without notice. For our full disclaimer, refer to page 2.

VUETRADE for the builder

STAINLESS STEEL R4 BRICK VENEER TIES

APPLICATION

VUETRADE R4 Brick Veneer Ties are made of Stainless Steel 316, and allow for higher resistance than that of R2 or R3 Ties.

They are suitable for use with TIMBER FRAMES only.

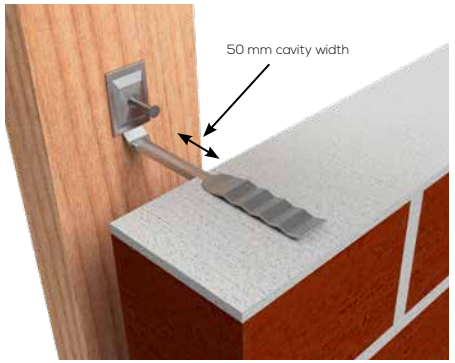

LIGHT DUTY WITH NAILS

R4

SPECIFICATION

VUETRADE Light Duty Brick Veneer Ties are rated as light duty conforming to AS2699.1:2020 and AS3700:2018.

Cavity Width	50mm
Usage	Within 1km from breaking surf, or within 100m from sheltered coastal
Fixing	Use only the supplied VUETRADE 30mm x 3.2mm Ø Stainless Steel Fixing Nail

MEDIUM DUTY WITH SCREWS

R4

SPECIFICATION

VUETRADE Medium Duty Brick Veneer Ties are rated as medium duty conforming to AS2699.1:2020 and AS3700:2018.

Cavity Width	50mm
Usage	Within 1km from breaking surf, or within 100m from sheltered coastal
Fixing	Use only the supplied VUETRADE 30mm x 4.5mm Ø Stainless Steel Fixing Screw

DETAILS

Product Code	Material	Durability Classification	Box Qty
VBTLDR4	SS 316	R4	150
VBTMDR4	SS 316	R4	150

R4

DURABILITY CLASSIFICATION

Within 1km from breaking surf,
or within 100m from sheltered coastal

The suitability of brick ties in different environmental conditions can be determined by reading off the specification area chart based on the type of environment and the distance where the brick ties will be used.

It is important to use the recommended brick tie classification to reduce the risk of brick tie corrosion that may affect the overall structure integrity.

Note: VUETRADE does not cover corrosion protection on heavy industrial areas as additional or highly specific requirements may be required.

For more information see Page 133.

VUETRADE for the builder

STAINLESS STEEL DOUBLE SLEEVE EXPANSION TIES

R4

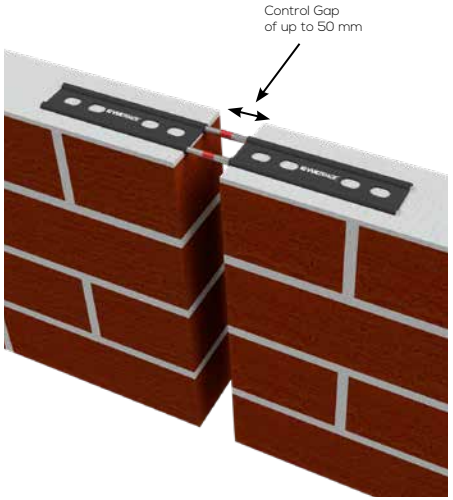

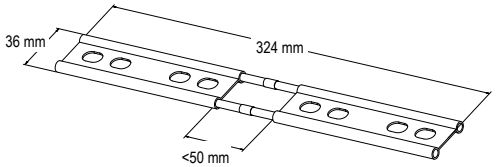

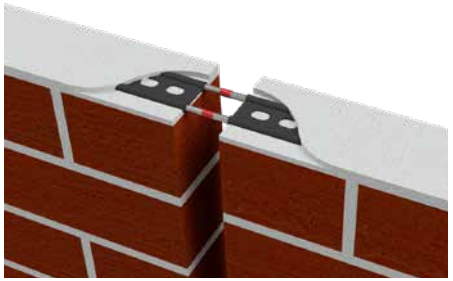

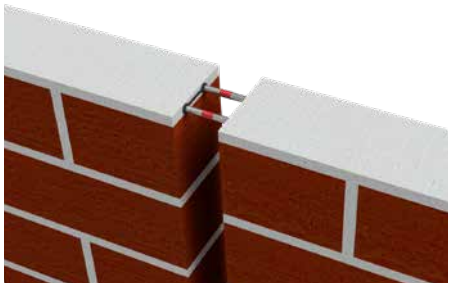

APPLICATION

VUETRADE Stainless Steel Double Sleeve Expansion Ties are a rod tie designed for vertical expansion joints. The rods have a plastic casing on each end which is laid into either side of the construction joint allowing movement.

SPECIFICATION

Bar Diameter: 5.5mm

Material: Stainless Steel 316

Sleeve: Polypropylene

DURABILITY

VUETRADE Double Sleeve Expansion Ties complies with the durability classification of AS2699.1:2020 as follow:

VTDSSS (Stainless Steel 316): Durability classification R4

SIZES

Product Code	Maximum Control Gap	Durability Classification	Box Qty
VTDSSS	50mm	R4	50

Bellevue Group Australasia are continuously working to develop and improve our product range.
We reserve the right to change specifications, etc. without notice. For our full disclaimer, refer to page 2.

VUETRADE for the builder

STAINLESS STEEL EXPANSION TIES

R4

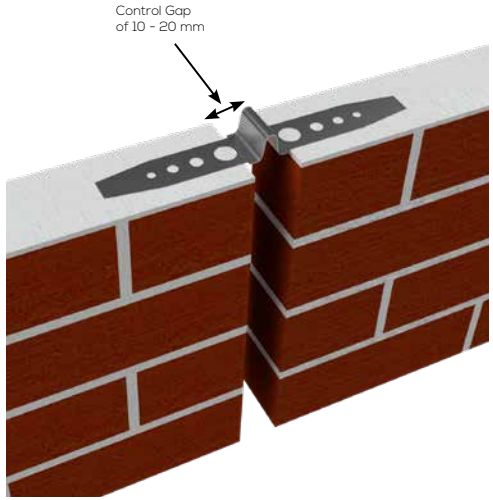

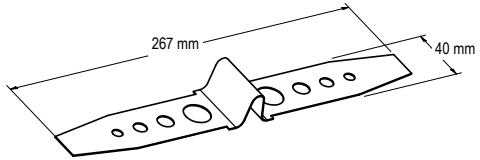

APPLICATION

VUETRADE Stainless Steel Expansion Ties features two ends with holes designed to hold in bed joints and a pre-bent middle section to provide a 10-20mm control gap during construction to accommodate for expansions.

SPECIFICATION

Material & Corrosion protection: Stainless Steel 316

DURABILITY

VUETRADE Expansion Ties are manufactured in Stainless Steel 316 which has a durability classification of R4 as per AS2699.1:2020.

VUETRADE Expansion Ties are tested and are compliant to AS2699.2:2020.

PRODUCT RANGES

Product Code	Maximum Control Gap	Durability Classification	Box Qty
VTEXTSS	20 mm	R4	60

VUETRADE Timber Connectors is a division of **Bellevue Group Australasia**
technical@bellevuegroup.com.au **1300 850 520** www.vuetrade.com

VUETRADE for the builder

CYCLONIC POST SUPPORTS

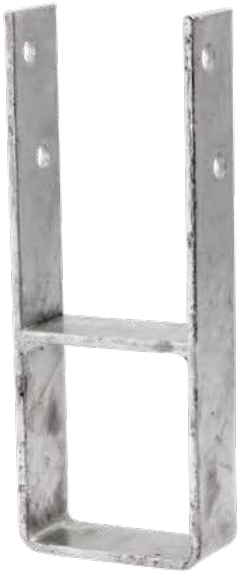

APPLICATION

VUETRADE Cyclonic Post Anchor is engineered and designed for use in cyclonic prone areas. The U-shaped base provides excellent anchorage setting into concrete to withstand large force imposed by high winds and cyclones.

SPECIFICATION

VUETRADE Cyclonic Post Support are manufactured out of G300 steel of 6mm thickness and corrosion protected with Hot-Dipped Galvanised.

FASTENERS

Saddle: 2x Zinc-Nickel Coated VUEBOLT or appropriate M12 bolts with hex nuts

SIZES

Product Code	Height (mm)	Stirrup Size (mm)	Box Qty
VCYPS30090	300	90	6
VCYPS300100	300	100	6
VCYPS45090	450	90	6
VCYPS450100	450	100	6
VCYPS450115	450	115	6
VCYPS450125	450	125	6
VCYPS60075	600	75	6
VCYPS60090	600	90	6
VCYPS600100	600	100	6
VCYPS600115	600	115	6
VCYPS600125	600	125	6
VCYPS600140	600	140	6
VCYPS600150	600	150	6

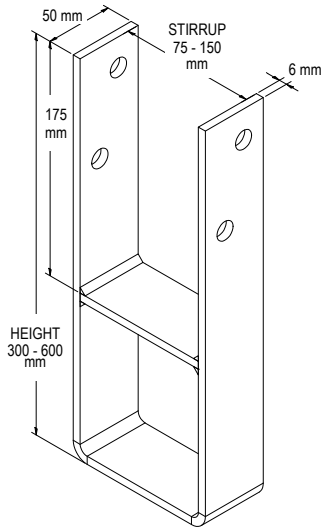

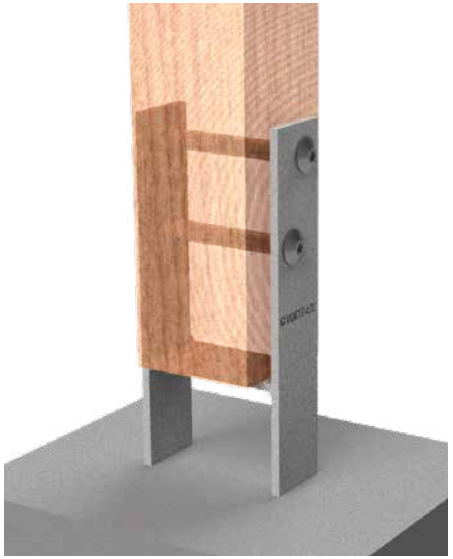

INSTALLATION GUIDE AND BOLT FIXING SCHEDULE

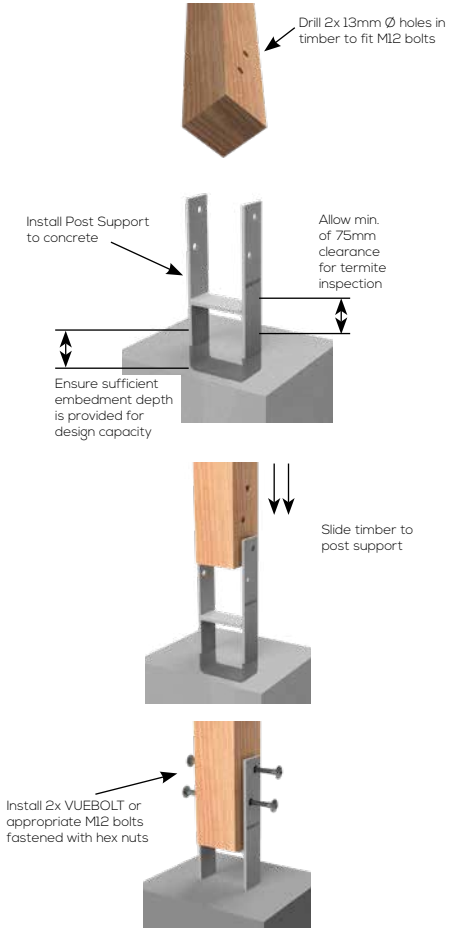

NOTES:

1. Embedment depth of the cyclonic post support should be determined and calculated a by Structural Engineer to achieve the reported design load. This usually depends on the type of concrete used, aggregate ratio etc.
2. 75mm clearance must be provided to conform to the requirements set out by AS3660.1:2014 - *Termite management, Part 1: New building work.*
3. Refer to AS1684.3:2021 Table 9.20 (j) for reinforced rod installation requirements.

DESIGN CAPACITY DATA

Table 79: Design capacity of cyclonic post support

Load Directions	Design Capacity, Ndj (kN) for timber species group JD4
Wind Uplift	41 kN

NOTES:

1. Design capacity in Table 79 applies to VUETRADE cyclonic post support where 2x M12 bolts are installed and tightly fastened with nuts.
2. Timber post dimensions must have minimum dimensions of 90mm by 90mm and shall be installed flat to the base of the cyclonic post support.
3. The design capacities are calculated based on the assumption that there is sufficient anchorage in the concrete to resist the pull-out force imposed by wind loading.
4. Design capacity in both tables are for wind uplift (vertical force direction) only and are obtained under test condition set out in AS1649-2001 – *Timber - Methods of test for mechanical fasteners and connectors*, along with appropriate computation from AS1720.1-2010.
5. VUETRADE Post Supports should only be used to resist wind uplift / dead load as specified in the TDS and should not be assumed to provide lateral stability. Sufficient bracing should be provided and approved by a structural engineer for lateral stability.

VUETRADE for the builder

HEAVY DUTY U-CUP BOLT DOWN POST SUPPORTS

BOLTED TO CONCRETE

APPLICATION

Heavy Duty U-Cup Bolt Down Post Supports are heavy duty anchors ideal for bolting timber posts to existing timber decking or concrete bases.

SPECIFICATION

VUETRADE Heavy Duty U-Cup Bolt Down Post Support are manufactured from 4mm thick G300 steel and corrosion protected with Hot Dipped Galvanised. Available in wide range of sizes to suit many common timber post sizes.

FASTENERS

Saddle: 2x VUEBOLT or appropriate M12 bolts with hex nuts

Base: 2x M12 concrete bolts or equivalent

SIZES

Product Code	Size (mm)	Bolt Size	Box Qty
VHDBPS75	75	M12	10
VHDBPS90	90	M12	10
VHDBPS100	100	M12	10
VHDBPS115	115	M12	10
VHDBPS125	125	M12	10
VHDBPS140	140	M12	10
VHDBPS150	150	M12	10

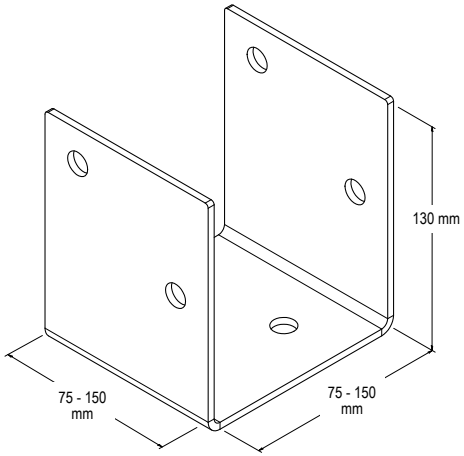

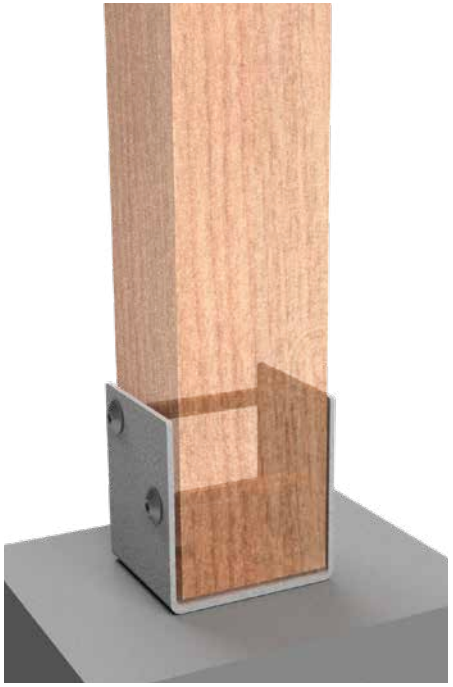

Bellevue Group Australasia are continuously working to develop and improve our product range.
We reserve the right to change specifications, etc. without notice. For our full disclaimer, refer to page 2.

VUETRADE for the builder

Timber Connectors
Compliance Data

INSTALLATION GUIDE AND BOLT FIXING SCHEDULE

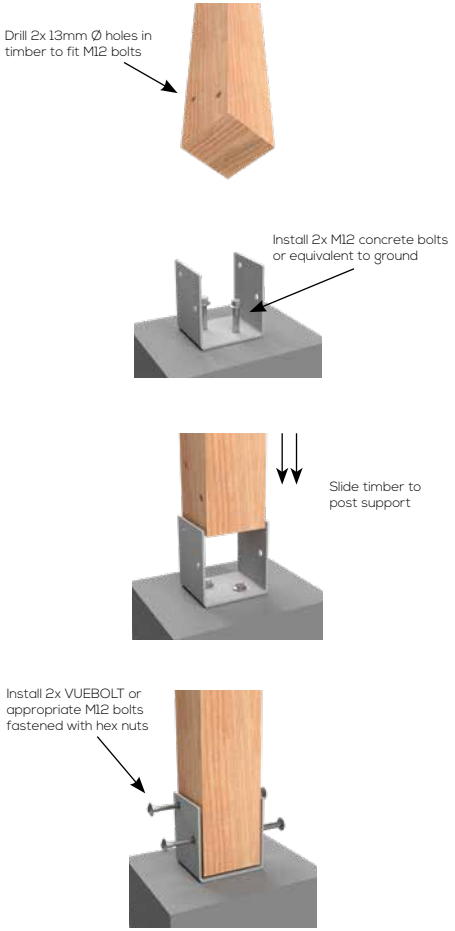

NOTES:

1. Ensure that suitable M12 concrete bolts are used when bolting post support to ground.
2. Use only galvanised bolts with galvanised post support, usage of other steel materials bolt with galvanised post support may lead to bimetallic corrosion.
3. Fixing of VUEBOLT may be used as an alternative to standard M12 bolts when fixing post support to timber posts for smooth architectural finish.

DESIGN CAPACITY DATA

Table 80: Design capacities of Heavy Duty U-Cup Bolt Down Post Support

Load Case	Design Capacity, Ndj (kN)					
	J3	J4	J5	JD3	JD4	JD5
Uplift capacity	16.9	13.4	11.6	21.0	16.9	14.7

NOTES:

1. Design capacity in Table 80 applies to VUETRADE Post Supports where 2x M12 bolts are installed and tightly fastened with hex nuts.
2. Bolts at the base of the post supports must have sufficient anchorage to resist wind uplift.
3. Timber post dimensions must have a minimum dimension of 75mm by 75mm section.
4. Design capacities in above tables are for forces in the vertical direction (wind uplifts) only and are obtained under test conditions defined in AS1649-2001 – *Timber - Methods of test for mechanical fasteners and connectors* & uplift capacity requirements outlined in AS1720.1-2010 – *Timber structures, Part 1: Design methods*.
5. VUETRADE Post Supports should only be used to resist wind uplift / dead load as specified in the TDS and should not be assumed to provide lateral stability. Sufficient bracing should be provided and approved by a structural engineer for lateral stability.
6. Design capacity of post support may be limited by the withdrawal tensile capacity of concrete bolts used to fasten post support to concrete ground. Ensure that suitable concrete bolts are used for above design capacity to be valid.

COMPLIANCE REFERENCE APPENDIX

DURABILITY CLASSIFICATION AND CORROSION PROTECTION GUIDE FOR VUETRADE TIMBER CONNECTOR PRODUCT

GENERAL

VUETRADE timber connector products are generally manufactured and corrosion protected in one of the following ways,

1. Manufactured with pre-galvanised steel (i.e., Joist Hangers, Triple Grips)
2. Manufactured with steel then hot dip galvanised. (i.e., Galvanised Post Supports)
3. Manufactured in Stainless Steel 304 and Marine Grade Stainless Steel 316 (i.e. Stainless Steel Joist Hangers, Stainless Steel Post Supports)

It is crucial to understand that the usage of different corrosion protection requirement is dependent on various conditions, which are stipulated around different Australian Standards and National Construction Code. This section will help builders and building designers to select the most appropriate corrosion protection to ensure long lasting product life on the job.

EXPOSURE CONDITIONS

To effectively utilise the correct corrosion protection VUETRADE timber connector product offers, the location of product usage shall be clearly established. Generally, VUETRADE products can be used in the following locations;

1. **INTERNAL** – This is usually areas within the building, enclosed and isolated from external environment. Moisture and salt exposures are generally low to none.
2. **EXTERNAL** – Usually denotes areas on the exterior of the buildings that is exposed, either partially or fully by repeated wetting, moisture, and salt.

DURABILITY CLASSIFICATION

It is also necessary to identify the durability requirements when using VUETRADE product. This usually depends on the environmental conditions in which the products are being used and can be categorized based on the distance from the coast. These environmental conditions varies based on several factors such as topography, local climate and localised winds and therefore shall be adequately specified/verified.

Condition	Distance from coast
Breaking Surf	0-1km 1-10km 10km+
Sheltered Coastal	0-100 metres 100m-1km 1km+
Fresh Water	Subject to frequent wetting and drying

Note: VUETRADE does not cover corrosion protection on heavy industrial areas as additional or highly specific requirements may be required.

AUSTRALIAN STANDARD & NATIONAL CONSTRUCTION CODE CORROSION PROTECTION REQUIREMENTS

AS1684:2021 series

Australian Residential timber-framed construction standard AS1684.2:2021, AS1684.3:2021 clause 1.15 specified that all connectors, including metal straps, framing anchors shall have a minimum corrosion protection of Z275. The level of corrosion protection needed should also take consideration of factors such as weather exposure, timber treatment, moisture, and presence of salt.

Clause 1.15 also specifies that whenever corrosion protection is required, sufficient corrosion protection shall be in accordance with the following codes:

- AS/NZS4791:2006 – *Hot-dip galvanized (zinc) coatings on ferrous open sections, applied by an in-line process*
- AS/NZS4534:2006 – *Zinc and zinc/aluminium – alloy coatings on steel wire*
- AS1397:2021 – *Continuous hot-dip metallic coated steel sheet and strips – Coatings of zinc and zinc alloyed with aluminium and magnesium*
- AS/NZS1214:2016 – *Hot-Dip Galvanised Coatings on Steel*

AS2699.1:2020 – Built-in components for masonry construction – Wall Ties

AS2699.1:2020 specified in Section 3 on deemed-to-comply material selection for wall ties shall be as follows:

DURABILITY CLASS R2 – Manufactured from galvanized steel with corrosion protection of minimum Z600 or if galvanized after manufacture shall comply with AS/NZS4680:2006 with 300 g/m2 of coating mass.

DURABILITY CLASS R3 – Minimum of 470 g/m2 of galvanise after manufacture. Stainless Steel is also acceptable.

DURABILITY CLASS R4 – Manufactured in Stainless Steel 316.

National Construction Code 2022 – ABCB Housing Provisions

Table 5.6.5d from ABCB Housing Provisions of the NCC 2022 provides corrosion protection requirements for masonry wall ties in different exposure conditions along with recommended corrosion protections.

Table 5.6.5d Corrosion protection for wall ties

Exposure condition	Tie specification (minimum corrosion protection)
Areas less than 1km from breaking surf; or less than 100 m from salt water not subject to breaking surf; or within heavy industrial areas.	Grade 316L stainless steel; or engineered polymer complying with the requirements of AS 2699.1.
Areas 1km or more but less than 10km from breaking surf; or 100m or more but less than 1km from salt water not subject to breaking surf.	Sheet steel and bar ties galvanised after manufacture - 470 g/m2 on each side; or galvanised wire ties - 470 g/m2 coating mass; or Grade 304L stainless steel.
All other areas	Galvanised sheet steel - 300 g/m2 coating on each side; or sheet steel ties galvanised after manufacture - 300 g/m2 on each side.

© Commonwealth of Australia and the States and Territories 2022, published by the Australian Building Codes Board.

SELECTION OF SUITABLE CORROSION PROTECTION ON VUETRADE PRODUCTS

Majority of VUETRADE products are adequately corrosion protected to meet all corrosion protection standards mentioned in previous section and are categorized into three main categories,

STANDARD / GALVANISED

- Internal / enclosed
- Exterior/exposed inland areas except if in contact with fresh water or non-saline wetting & drying

MARINE ENVIORNMENT – SS304

- Marine Environment – 100m up to 1km from a non-surf coast and from 1km up to 10km from a surf coast
- External applications in contact with freshwater or subject to non-saline wetting and drying
- Minimum steel grade required Stainless Steel 304

SEVERE MARINE – SS316

- Severe Marine – 100m from a non-surf coast and up to 1km from a surf coast
- Minimum Steel Grade Stainless Steel 316
- No 'Tea Staining', a superficial 'rust' look that occurs on lower grades of Stainless Steel including 304.

COMPLIANCE REFERENCE APPENDIX

VUETRADE BUILDER'S STRAPPING DESIGN GUIDE AND COMPLIANCE

GENERAL

This section will provide guidance and compliance details on VUETRADE bracing products. This guide covers the following products:

- VUETRADE Punched Builder's Strapping
- VUETRADE Punched Builder's Strapping Strip
- VUEBRACE Unpunched Builder's Strapping
- VUETRADE Angle Brace
- VUEBRACE Stainless Steel Builder's Strapping

UNDERSTANDING AS1684:2021 BRACING REQUIREMENTS

The usage of metal straps for bracing purposes are detailed in Section 8 of AS1684 series, specifically in Clause 8.3.6.3 on structural wall bracing. AS1684.2:2021 Table 8.18 provides different bracing capacity based on type of bracing style used.

These bracing capacities are expressed as its unit capacity in kN per lineal metre of braced wall. AS1684.2:2021 Clause 8.3.1 (e)(ii) specifically mentioned:

> *The total capacity of each brace is equal to the length of the braced wall multiplied by its unit capacity (kN/m) as given in Table 8.18. For example, a diagonal brace Type (c) as per Table 8.18 has a total capacity of 1.5 kN/m x length of bracing wall = 1.5 kN/m x 2.4m = 3.6 kN for a 2.4m long section of braced wall.'*

The bracing capacities shown in Table 8.18, is limited to the specified spacing between straps. Take example from Table 8.18 (b), bracing capacity of 1.5kN/m can be achieved if used within spacing between straps of 1800mm to 2700mm. This applies to wall heights as well, however AS1684.2:2021 Section 8.3.6.4 has provided a multiplier table 8.19 that allow bracing to be used at wall height larger than 2700mm, up to 3900mm max.

AS 1684.2:2021: Table 8.19: Multiplier Table

Wall Height (mm)	Multiplier
3000	0.9
3300	0.8
3600	0.75
3900	0.7

Table 8.18 (c) – METAL ANGLE BRACES

Bracing Capacity – 1.5 kN/m

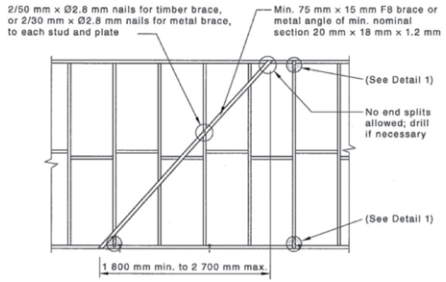

(Figure extracted from AS1684.2:2021 Table 8.18 (c))

Table 8.18 (b) – METAL STRAPS - TENSIONED

Bracing Capacity – 1.5 kN/m

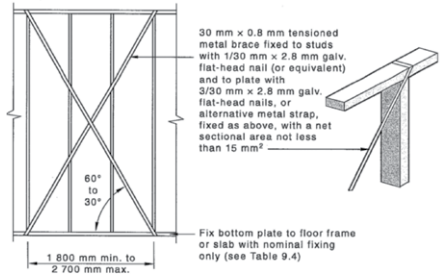

(Figure extracted from AS1684.2:2021 Table 8.18 (b))

Table 8.18 (d) – METAL STRAPS – TENSIONED – WITH STUD STRAPS

Bracing Capacity – 3.0 kN/m

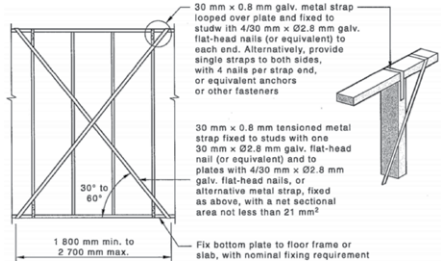

(Figure extracted from AS1684.2:2021 Table 8.18 (d))

Bellevue Group Australasia are continuously working to develop and improve our product range.
We reserve the right to change specifications, etc. without notice. For our full disclaimer, refer to page 2.

BRACING SIZE SELECTION AND COMPLIANCE TO AS1684.2:2021

Bracing methods shown previously in AS1684.2:2021 Table 8.18 (b), (c) & (d) also covers the details on the minimum sectional size metal braces should adhere to.

Table 8.18 (b) specifies the follow,

> *30mm x 0.8mm tensioned metal strap fixed to studs; or alternative metal straps fixed with a net sectional area not less than 15mm2 '*

Table 8.18 (d) specifies the follow,

> *'30mm x 0.8mm tensioned metal strap fixed to studs; or alternative metal straps fixed with a net sectional area not less than 21mm2 '*

Despite 30mm x 0.8mm = 24mm2 seems to meet the requirement of 21mm2, however due to reduction in area by hole punched for nails and tensioner bolts, the net sectional area after reduction usually yield area less than 21mm2, making steel brace of 30mm x 0.8mm not suitable for bracing required by AS1684.2:2021 Table 8.18(d).

To comply with the requirement, a larger sized bracing strap would be required. A metal strap 30mm x 1.0mm (30mm2 in area), along with the reduction of area due to nail and tensioner holes will still yield a net sectional area of larger than 21mm2, therefore complies with the standard stipulated in AS1684.2:2021 Table 8.18 (d).

VUEBRACE NET SECTIONAL AREA COMPLIANCE

VUEBRACE Builder's Strapping complies with the minimum net sectional area of strap required in AS1684.2:2021 & AS1684.3:2021 as follow:

- VUEBRACE 30mm x 0.8mm complies with min net sectional area of 15mm2 for use on structural wall bracing following specification provided in AS1684.2:2021 & AS1684.3:2021 Table 8.18(b).
- VUEBRACE 30mm x 1.0mm complies with min net sectional area of 21mm2 for use on structural wall bracing following specification provided in AS1684.2:2021 & AS1684.3:2021 Table 8.18 (d).

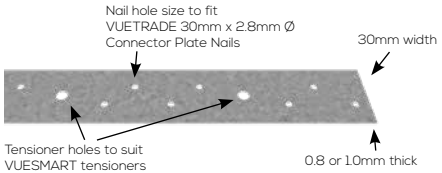

VUEBRACE BUILDER'S STRAPPING COMPLIANCE TO AUSTRALIAN STANDARD

VUEBRACE Builder's Strapping, when installed and used with its intended purpose depicted in VUETRADE Technical Data Sheet, meets and complies the following Australian Standards,

1. Usage as structural bracing in accordance with AS1684.2:2021, AS1684.3:2021 Table 8.18 (b) and Table 8.18(d).
2. VUEBRACE 30mm x 0.8mm, 30mm x 1.0mm and 30mm x 1.2mm meets and exceeds the minimum net sectional area of 15mm2 required by AS1684.2:2021 Table 8.18 (b).
3. VUEBRACE 30mm x 1.0mm and 30mm x 1.2mm meets and exceeds the minimum net sectional area of 21mm2 required by AS1684.2:2021 Table 8.18(d).
4. Meets the minimum corrosion protection of Z275 as required in AS1684 Clause 1.15: Steel grade and corrosion protection.
5. Corrosion protection of Z275 of VUEBRACE complies with coating mass requirements listed in AS1397:2021.
6. Meets the minimum grade of G300 as required in AS1684 Clause 1.15: Steel grade and corrosion protection.
7. G300 material of VUEBRACE complies with material specification listed in AS1397:2021 for G300 material.

VUETRADE Timber Connectors is a division of **Bellevue Group Australasia**
technical@bellevuegroup.com.au **1300 850 520** www.vuetrade.com

POST SUPPORT BUYERS GUIDE

Where 'xx' is listed in the product code this denotes a leg / height variable that does not affect matching of timber size or VUEBOLT.

SADDLED POST SUPPORTS

Icons	Product	Code	Timber Post Size (SQUARE)	75	90	100	115	125	135	140	150	180	200 mm
G	**Tradies Bolt Down**	VTBPS			VTBPS 90								
G	**Bolt Down**	VBPS			VBPS 90	VBPS 100	VBPS 115	VBPS 125	VBPS 135(SS)	VBPS 140(SS)	VBPS 150(SS)		VBPS 200(SS)
G	**Heavy Duty U-Cup Bolt Down**	VHDBPS		VHDBPS 75	VHDBPS 90	VHDBPS 100	VHDBPS 115	VHDBPS 125		VHDBPS 140	VHDBPS 150		
G	**Full Stirrup**	VPS			VPS xx90	VPS xx100	VPS xx115	VPS xx125	VPS xx135	VPS xx140	VPS xx150		
G	**Cyclonic Post Support**	VCYPS		VCYPS 60075	VCYPS xx90	VCYPS xx100	VCYPS xx115	VCYPS xx125		VCYPS xx140	VCYPS xx150	VCYPS xx180	
G	**Suitable VUEBOLT**				M12 **VUEBOLT** 90110HD		M12 **VUEBOLT** 110150						

G Galvanised · Stainless Steel 304 · Stainless Steel 316 · Cyclonic · Bolted to Concrete · Cast Into Concrete

Bellevue Group Australasia are continuously working to develop and improve our product range.
We reserve the right to change specifications, etc. without notice. For our full disclaimer, refer to page 2.

v1.2 DEC23
VUETRADE Timber Connectors is a division of **Bellevue Group Australasia**
technical@bellevuegroup.com.au **1300 850 520** www.vuetrade.com

POST SUPPORT BUYERS GUIDE

BLADED POST SUPPORTS

Icons	Product	Code	Timber Post Size (SQUARE)	90	100	115	140	150	180*	230	250**	350 mm
G, Water, Wind, Bolted to Concrete	**T-Blade**	VBPTB		VBPTB 90100		VBPTB 115140		VBPTB 150180		VBPTB 180200***		VBPTB 250350
G, Water, Wind, Bolted to Concrete, Cast Into Concrete	**T-Blade with Leg**	VHDBLPS		VHDBLPS 60080		VHDBLPS 600110		VHDBLPS 300140 SOLID & 600140 SOLID		VHDBLPS 600110		
G, Water, Wind, Bolted to Concrete, Cast Into Concrete	**Centre Blade**	VBLPS		VBLPS 125 VBLPS 300								
G, Bolted to Concrete	**Concealed Bolt Down**	VCBPS		VCBPS 90								
G, Wind	**Suitable VUEBOLT**			M12 **VUEBOLT** 90110HD		M16 **VUEBOLT** 110150HD		M16 **VUEBOLT** 150230			M20 **VUEBOLT** 230360	

If your post support or timber size isn't listed, please contact us for appropriate solutions and fastening information.

* Exactly 180mm square timber posts can be secured by the following five products: VBPTB 150180 & 180200, and VHDBLPS 300140 SOLID, 600140 SOLID & 600110.

** Exactly 250mm square timber posts can be secured by the following three products: VBPTB 180200 & 250350, and VHDBLPS 600110.

*** The largest size timber that can be secured on a VBPTB 180200 post with a VUEBOLT is 230mm square. This support can secure up to 250mm size timber using other appropriate M16 bolts fastened with hex nuts.

G Galvanised · Stainless Steel 304 · Stainless Steel 316 · Cyclonic · Bolted to Concrete · Cast Into Concrete

TIMBER CONNECTORS AREA USAGE CHART

To assist with proper product specification and to ensure the correct grade steel is used for the local area or environment; VUETRADE have developed unique and easy to understand icons for our Timber Connectors range.

We also have a coordinating chart which gives a visual guide as to which products should be used in proximity to different environmental factors.

BREAKING SURF:

Breaking surf environments, as the name indicates, relates to areas in proximity to the coast where there is rolling surf breaking onto beaches or rocks. In these environments, salt content in the air is obviously much higher and is carried by the wind. The closer you are to breaking surf the more the elements will affect your home or construction. It's also important to note that windblown salt spray can reach a long way inland, depending on the conditions. These types of areas are classified as Severe Marine as the degrading of steel from saltwater attack happens very quickly.

SHELTERED COASTAL:

Sheltered Coastal environments are locations where there is no breaking surf in the vicinity, for example very sheltered bay areas, salt water harbours and salt water river estuaries. The salt content in the air will be lower as the water isn't breaking, however these areas are considered Marine Environment as degrading of steel will occur due to the salt content in the air.

FRESHWATER:

Where there will be constant contact with freshwater or frequent wetting and drying. This could also apply to areas where there is excessive dampness and any timber connectors used will be constantly damp.

POOLS:

Areas of decking around pools, whether it is a freshwater or saltwater pool, will be subjected to more frequent wetting and drying. If it is a Saltwater pool it is recommended to use Stainless Steel Brackets as degradation and corrosion will occur if galvanised brackets are used. As with Freshwater above, if there will be excessive splashing and frequent wetting and drying of the brackets from non-saltwater pool, it may be more practical to use stainless steel fixings and brackets.

STANDARD:

Standard locations are inland areas that are not exposed to salt attack or freshwater wetting and drying.

Follow the questions below to consider what environment your site is located in.

1. What type of environment are you planning to build near?

a. Breaking Surf
b. Sheltered Coastal
c. Fresh Water

2. Distance to the environment?

a. Breaking Surf:
i. 0 - 1kms
ii. 1 - 10kms
iii. 10 kms+

b. Sheltered Coastal:
i. 0 - 100 metres
ii. 100m - 1km
iii. 1 km+

c. Fresh Water (if subject to frequent wetting and drying)

Be sure to consider other elements such as proximity to industrial areas to get the best possible result and longetevity of your metallic timber connection.

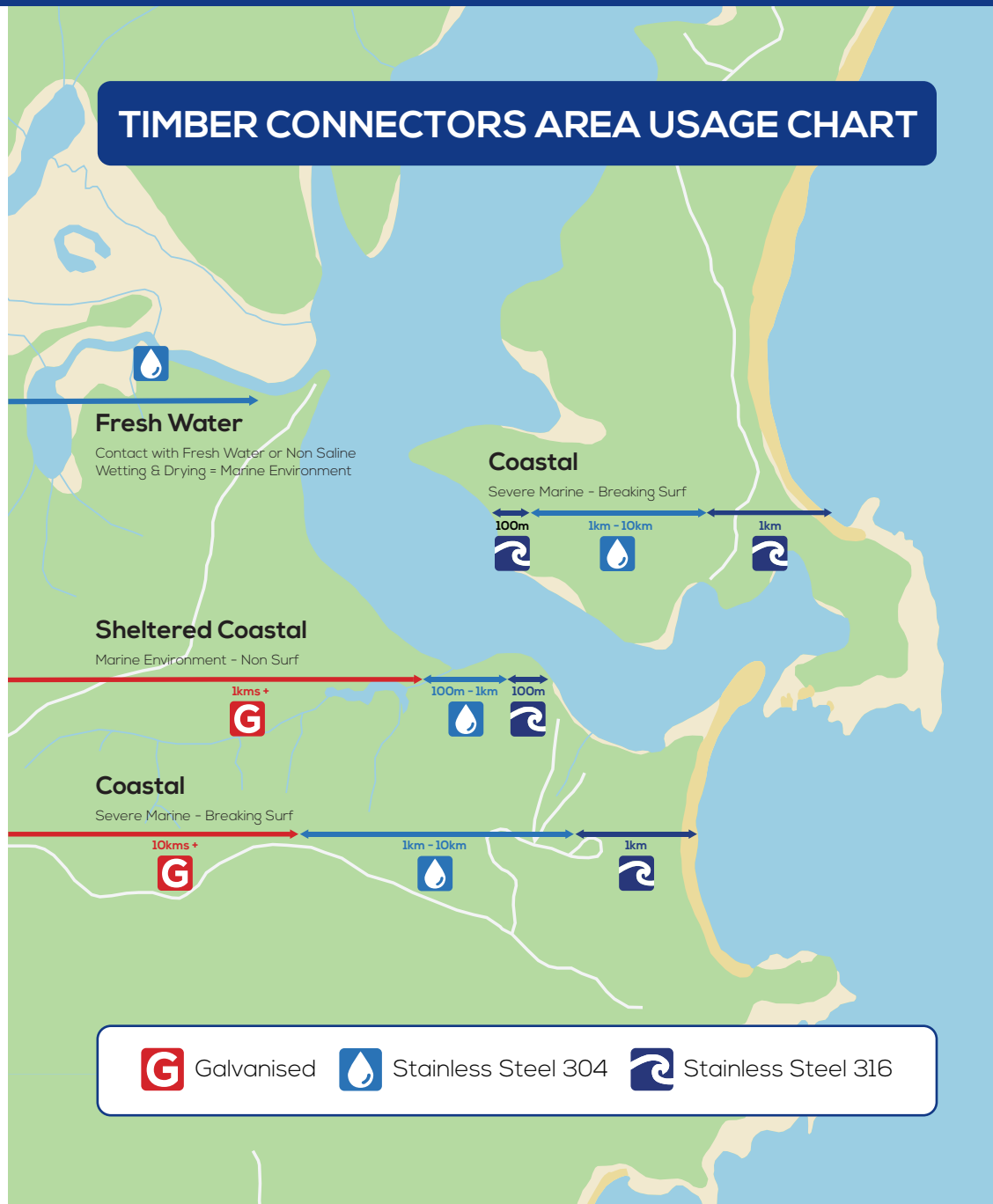

Bellevue Group Australasia are continuously working to develop and improve our product range.
We reserve the right to change specifications, etc. without notice. For our full disclaimer, refer to page 2.

1300 850 520
www.vuetrade.com
technical@bellevuegroup.com.au

VUETRADECOMP-12DEC23