VUETRADE for the builder

Timber Connectors
Technical Data Sheet

STAINLESS STEEL BOLT DOWN POST SUPPORTS

OCT26

Compliant with the requirements of AS1720.

304 STAINLESS STEEL

316 STAINLESS STEEL

BOLTED TO CONCRETE

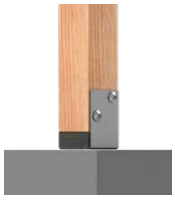



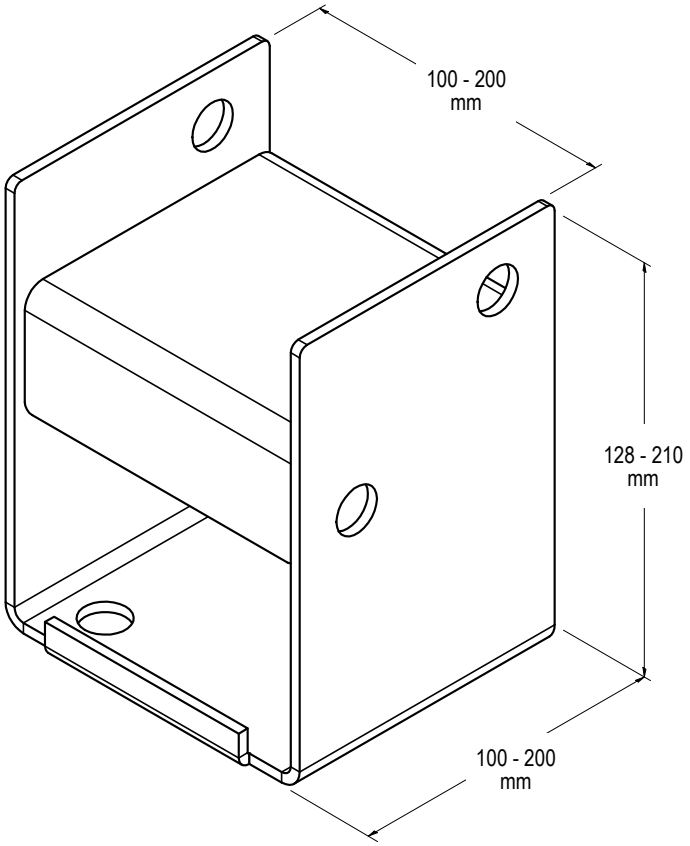

APPLICATION

Stainless Steel Bolt Down Post Supports are anchors ideal for bolting down timber posts in coastal areas.

SPECIFICATION

VUETRADE Stainless Steel Bolt Down Post Supports are available in SS304 and SS316 with a plate thickness of 3mm (100mm Bolt Downs) and 4mm (rest of range).

FASTENERS

Saddle: 2x Stainless Steel VUEBOLT or appropriate M12 bolts with hex nuts

Base: 2 / 4x M12 stainless steel concrete bolts or equivalent in specified bolt holes*

* Stirrup Sizes 125mm and larger will have 4x bolt holes in base.

Only use stainless steel fasteners (bolts) with stainless steel post support, usage of other steel materials may lead to bimetallic corrosion.

SIZES

Product Code	Stirrup Size (mm)	Saddle & Base Thickness (mm)	Box Qty
VBPS100SS	100	3	10
VBPS115SS	115	4	10
VBPS125SS	125	4	10
VBPS135SS	135	4	10
VBPS140SS304	140	4	1
VBPS150SS304	150	4	1
VBPS200SS	200	4	10

Codes above are for Stainless Steel 304 products, for Stainless Steel 316 add '316' to the end of the code.

NOTE:

'Tea-staining' is a cosmetic issue with some VUETRADE Stainless Steel Post Supports (more prevalent in SS304) but this does not affect the structural integrity or material lifetime of the post support.

technical@bellevuegroup.com.au
1300 850 520 www.vuetrade.com

VUETRADE Timber Connectors is a division of **Bellevue Group Australasia**.
Bellevue Group Australasia are continuously working to develop and improve our product range. We reserve the right to change specifications, etc. without notice.

STAINLESS STEEL BOLT DOWN POST SUPPORTS

OCT26

INSTALLATION GUIDE AND BOLT FIXING SCHEDULE

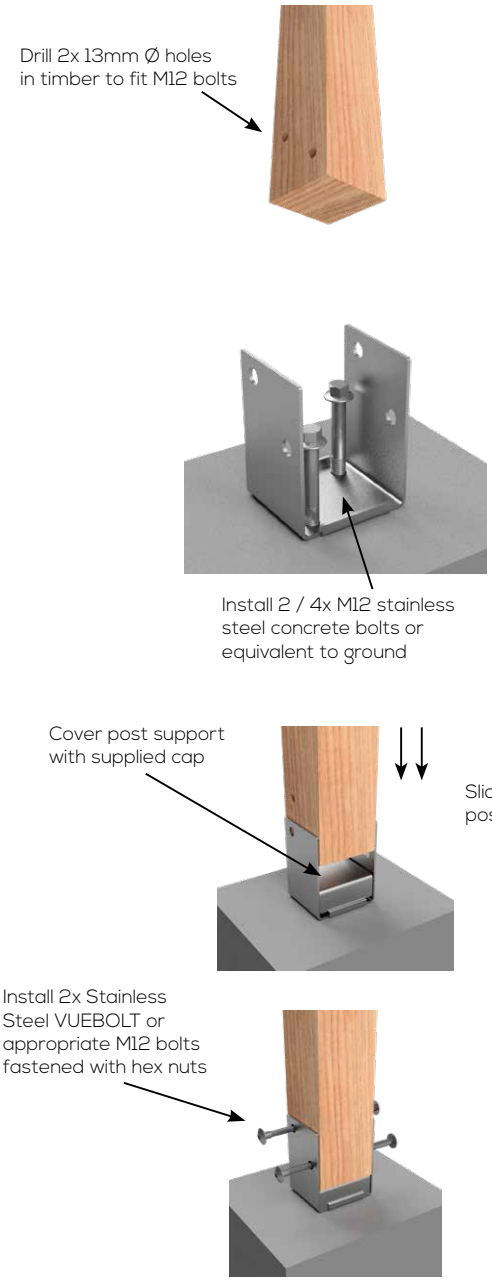

NOTES:

1. Ensure that suitable Stainless Steel M12 concrete bolts are used when bolting post support to ground.
2. VUEBOLT may be used as an alternative to standard M12 bolts when fixing post support to timber posts for a concealed and smooth finish.

DESIGN CAPACITY DATA

Table 1: Design Capacity of Stainless Steel Bolt Down Post Support in different joint groups

Load Case	Design Capacity, Ndj (kN)					
	J3	J4	J5	JD3	JD4	JD5
Uplift capacity	9.4	7.5	6.5	11.8	9.4	8.2

NOTES:

1. Design capacity in Table 1 applies to VUETRADE Stainless Steel Bolt Down Post Supports where 2x M12 SS VUEBOLTS / appropriate bolts are installed and tightly fastened with hex nuts.
2. Timber posts must have minimum dimensions of 100mm by 100mm section and shall be installed flat to the provided concealing cap of the post support.
3. Footings by others.

   a. Design capacities for post supports bolted or cast into concrete assumed that there is sufficient anchorage to resist wind uplift.

   b. Design capacity of this post support may be limited by the withdrawal tensile capacity of concrete bolts used to fasten post support to concrete ground. Ensure that suitable concrete bolts are used for above design capacities to be valid.
4. Design capacities in the above table are for wind uplift (vertical force direction) only and are obtained under strict in-house test conditions defined by AS1649:2025 – *Timber - Methods of test for mechanical fasteners and connectors* & uplift capacity requirements outlined in AS1720.1-2010 – *Timber structures, Part 1: Design methods*.
5. VUETRADE Post Supports should only be used to resist wind uplift / dead load as specified in the TDS and should not be assumed to provide lateral stability. Sufficient bracing should be provided and approved by a structural engineer for lateral stability.
7. Design capacity in Table 1 are based on Category 1 joints where it is applicable for failures that would be unlikely to affect an area of greater than 25m2. For Category 2 and Category 3 joints, design capacities in this table are modified by multiplying 0.941 and 0.882 respectively.

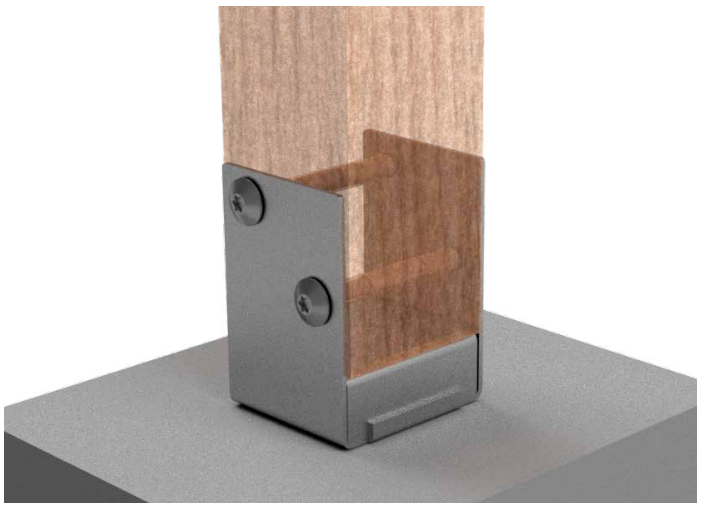

technical@bellevuegroup.com.au
1300 850 520 www.vuetrade.com

VUETRADE Timber Connectors is a division of **Bellevue Group Australasia**.
Bellevue Group Australasia are continuously working to develop and improve our product range. We reserve the right to change specifications, etc. without notice.